CRARY WeedRoller

OWNER'S/PARTS MANUAL

DC GEARBOX WEEDROLLER

REGULATIONS FOR WEED REMOVAL VARY FROM STATE TO STATE. CONSULT YOUR STATE AND LOCAL WEED REMOVAL REGULATIONS.

RECORD SERIAL NUMBER HERE

PN: 51285 R121411

HOW TO REACH US

ADDRESS	HOURS	TELEPHONE FAX NUMBER	E-MAIL INTERNET
WeedRoller 237 12th St. NW West Fargo, ND 58078	Monday-Friday 8 am-5pm (CST)	Parts and Service Ph: 701.282.5520 • 800.247.7335 Fax: 701.282.9522	Email: service@weedroller.com • sales@weedroller.com Online: www.weedroller.com

BEFORE YOU BEGIN

DEAR WEEDROLLER CUSTOMER,

Thank you for purchasing a Crary WeedRoller. The WeedRoller is designed, tested, and manufactured to give years of dependable performance. It is necessary to correctly adjust and make regular inspections to keep your WeedRoller operating at peak efficiency. The following pages will assist in the installation, operation and maintenance of your machine. Please read this manual before operating the WeedRoller.

If you have any questions or comments about this manual, please call us toll-free at 1-800-247-7335.

Please call or write your local factor-authorized WeedRoller dealer with questions or problems with your WeedRoller.

This document is based on information available at the time of its publication. WeedRoller is continually making improvements and developing new equipment. In doing so, we reserve the right to make changes or add improvements to our product without obligation for equipment previously sold.

Please Send Us Your Warranty Card

A warranty card is included with the WeedRoller. Please take the time to fill in the information requested on the card. When you send your completed card to us, we will register your WeedRoller and start your coverage under our limited warranty.

SERIAL NUMBER LOCATION

Always give your authorized WeedRoller dealer the serial number of your WeedRoller when ordering parts, requesting service or any other information.

Please record the serial number in the space provided on the front cover and on the warranty and registration card.

MANUFACTURED BY CRARY INDUSTRIES
WEST FARGO, NORTH DAKOTA 58078 U.S.A.
SERIAL NUMBER XXXXXX
MANUFACTURED IN U.S.A.

Serial Number Decal

© 2011, Crary Industries, All rights reserved. Produced and printed in the USA.

LIMITED WARRANTY

This warranty applies to all AG and Outdoor Power Equipment manufactured by Crary Industries.

Crary Industries warrants to the original owner each new Crary Industries product to be free from defects in material and workmanship, under normal use and service. The warranty shall extend 1 year from date of delivery for income producing (commercial) applications and 2 years from date of delivery for non-income producing (consumer) use of the product. The product is warranted to the original owner as evidenced by a completed warranty registration on file at Crary Industries. Replacement parts are warranted for (90) days from date of installation.

THE WARRANTY REGISTRATION MUST BE COMPLETED AND RETURNED TO CRARY INDUSTRIES WITHIN 10 DAYS OF DELIVERY OF THE PRODUCT TO THE ORIGINAL OWNER OR THE WARRANTY WILL BE VOID.

In the event of a failure, return the product, at your cost, along with proof of purchase to the selling Crary Industries dealer. Crary Industries will, at its option, repair or replace any parts found to be defective in material or workmanship. Warranty on any repairs will not extend beyond the product warranty. Repair or attempted repair by anyone other than a Crary Industries dealer as well as subsequent failure or damage that may occur as a result of that work will not be paid under this warranty. Crary Industries does not warrant replacement components not manufactured or sold by Crary Industries.

1. This warranty applies only to parts or components that are defective in material or workmanship.
2. This warranty does not cover normal wear items including but not limited to bearings, belts, pulleys, filters and chipper knives.
3. This warranty does not cover normal maintenance, service or adjustments.
4. This warranty does not cover depreciation or damage due to misuse, negligence, accident or improper maintenance.
5. This warranty does not cover damage due to improper setup, installation or adjustment.
6. This warranty does not cover damage due to unauthorized modifications of the product.
7. Engines are warranted by the respective engine manufacturer and are not covered by this warranty.

Crary Industries is not liable for any property damage, personal injury or death resulting from the unauthorized modification or alteration of a Crary product or from the owner's failure to assemble, install, maintain or operate the product in accordance with the provisions of the Owner's manual.

Crary Industries is not liable for indirect, incidental or consequential damages or injuries including but not limited to loss of crops, loss of profits, rental of substitute equipment or other commercial loss.

This warranty gives you specific legal rights. You may have other rights that may vary from area to area.

Crary Industries makes no warranties, representations or promises, expressed or implied as to the performance of its products other than those set forth in this warranty. Neither the dealer nor any other person has any authority to make any representations, warranties or promises on behalf of Crary Industries or to modify the terms or limitations of this warranty in any way. Crary Industries, at its discretion, may periodically offer limited, written enhancements to this warranty.

CRARY INDUSTRIES RESERVES THE RIGHT TO CHANGE THE DESIGN AND/OR SPECIFICATIONS OF ITS PRODUCTS AT ANY TIME WITHOUT OBLIGATION TO PREVIOUS PURCHASERS OF ITS PRODUCTS.

IMPORTANT

THE WEEDROLLER IS UNIQUE:

The patented WeedRoller is the only device of its kind utilizing the concept of surface activity to free a defined area of weeds and light sediments. Because of its uniqueness, many neighbors, observers, and even natural resource officials may be unfamiliar with the product and what it does.

The legal restrictions governing the WeedRoller vary from state to state. There may be restrictions because of federal regulations, county or city authorities, lake associations, or private access lakes. Please check into any new or additional concerns that may apply to your individual application.

THE WEEDROLLER IS ENVIRONMENTALLY FRIENDLY:

The WeedRoller is 100% chemical free. Seasonal use of the WeedRoller will eliminate the need for adding toxic weed control chemicals that are harmful to lake life, water quality and even the health of people and animals.

The WeedRoller has been known to provide great spawning areas for most types of fish. It also can provide the perfect “attack” zone for fish. This “weed line” is where large fish hide waiting for the smaller fish to appear in the open. The attack zone is a great area for fishing.

THE WEEDROLLER IS SAFE:

The WeedRoller works automatically when the waterfront is not in use. WeedRoller should not be operated in areas where people are swimming or engaging in other waterfront activities.

IMPORTANT GUIDELINES FOR USING THE WEEDROLLER

TELL YOUR NEIGHBORS:

Neighboring property owners may be curious about your WeedRoller. If you show them the product, and explain how it works, they will appreciate it and know that it will not negatively affect them. In fact, the improved swimming area has, in many instances, improved property values.

The WeedRoller will stir up areas where accumulations of light sediment or “muck” exist. These sediments will move with whatever natural water currents exist. This may, in some cases, cloud the water for your neighbors. They need to know that the clouding will disappear when the light materials have been carried out of the WeedRoller area. Also, tests show that most sediment does not move very far from the WeedRoller operating area. The relocated sediment may be measurably deeper within 10 feet of the operating arc, but not much beyond. In most cases, it does not impact adjoining property. Typically, normal wind and wave action will quickly have the whole area looking as if nothing has changed.

GATHER UPROOTED WEEDS:

During the initial phase of WeedRoller operation (usually three days or less), existing weeds and vegetation will become dislodged and float to the surface. Many weeds can float away and re-root somewhere else. During this initial operating period, it is important to gather these floating weed segments and safely dispose of them so you don't contribute to someone else’s weed problem. Many natural resources departments require clean up of weeds, no matter what type of weed removal method is used.

With regular WeedRoller use, weeds are prevented from regenerating in the operating area. Therefore, after the initial phase, the WeedRoller is a weed preventative. Gathering and potential spreading of weeds is generally not an issue after this initial phase.

BE AWARE OF FISH SPAWNING SEASON:

Many types of fish prefer to spawn in weed free and shallow areas. The clear sandy bottom created by the WeedRoller is often ideal, and many fish will be attracted to this area for spawning. The WeedRoller can help increase the fish population if it is not operated during the critical spawning period. During this period, operating the WeedRoller can destroy the eggs and affect the hatch in the spawning beds. Please identify these critical times by contacting your DNR or fisheries specialist, and refrain from WeedRoller operation during this time.

COMPLY WITH STATE AND LOCAL REGULATIONS:

Restrictions on the WeedRoller may vary from state to state. Additional restrictions may exist within municipalities, counties, or within private lake associations. A permit may be required. Please check with appropriate authorities regarding applicable requirements.

Individuals within your governing bodies may be unfamiliar with the WeedRoller and issues regarding weed removal. Inviting an enforcement officer to view the WeedRoller while it is in operation may help to clear up any questions he or she has.

We welcome feedback from our customers regarding information contained in this manual. Please feel free to call us at 1-800-247-7335.

TABLE OF CONTENTS

DESCRIPTION	PAGE
SAFETY	**1**
1.1 SAFETY ALERT SYMBOL	1
1.2 BEFORE OPERATING	1
1.3 ELECTRICAL SAFETY	2
1.4 OPERATION SAFETY	2
1.5 SAFETY DECALS	3
ASSEMBLY	**4**
2.1 BEGINNING ASSEMBLY	4
2.2 INSTALL CONTROL TOP COVER KNOB	4
2.3 ATTACH DOCK MOUNT BRACKETS	5
2.4 CHOOSE CORRECT DOCK MOUNT	6
2.5 CONNECT ROLLER TUBES	7
2.6 CONNECT DRIVE HEAD TO POWER SUPPLY	8
OPERATION	**9**
3.1 INITIAL OPERATION	9
3.2 ADJUSTING THE SWITCH ARMS	10
3.3 PREVENTING PROBLEMS CAUSED BY MUDDY CONDITIONS	11
3.4 ADJUSTING THE DOCK MOUNTING BRACKETS FOR MUDDY OR UNEVEN LAKE BOTTOMS	11
3.5 OFF-SEASON STORAGE	11

DESCRIPTION	PAGE
SERVICE & MAINTENANCE	**12**
4.1 TRIPPED CIRCUIT BREAKER	12
4.2 SERVICING MOTOR ASSEMBLY	13
4.3 REPLACING ROLLER FLEX COUPLER	14
4.4 REPLACING THE GEARBOX	14
4.5 INSTALL A NEW MAGNET	14
4.6 INSTALLING OR REPLACING THE SMART SWITCH	15
4.7 ATTACH THE PROXIMITY SENSORS	15
TROUBLESHOOTING	**16**
5.1 TROUBLESHOOTING	16
SERVICE & MAINTENANCE	**17**
6.1 AC WEEDROLLER SERVICE RECORDS	17
6.2 DC WEEDROLLER (GEARBOX) TROUBLESHOOTING FLOW CHART 1	18
6.3 DC WEEDROLLER (GEARBOX) TROUBLESHOOTING FLOW CHART 2	19
6.4 DC WEEDROLLER WIRING DIAGRAM	20
6.5 WEEDROLLER HISTORY	21

Section 1 SAFETY

1.1 SAFETY ALERT SYMBOL

The Owner/Operator's manual uses this symbol to alert you of potential hazards. Whenever you see this symbol, read and obey the safety message that follows it. Failure to obey the safety message could result in personal injury, death or property damage.

CAUTION

Indicates a potentially hazardous situation that, if not avoided, may result in minor or moderate injury.

WARNING

Indicates a potentially hazardous situation that, if not avoided, could result in death or serious injury.

DANGER

Indicates an imminently hazardous situation that, if not avoided, will result in death or serious injury.

1.2 BEFORE OPERATING

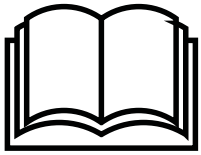

1. Read and understand this Owner/Operator's manual. Be completely familiar with the controls and the proper use of this equipment.
2. Familiarize yourself with all of the safety and operating decals on this equipment and on any of its attachments or accessories.
3. Keep safety decals clean and legible. Replace missing or illegible safety decals.
4. Use a 110 volt ground fault interrupter circuit.
5. Never allow people to enter the water while the WeedRoller is operating.
6. Adjust the reversing switches to the proper angle.
7. Keep away from all moving parts.
8. Avoid wearing loose fitting clothing while operating this machine. Never operate this machine wearing clothing with drawstrings that could wrap around or get caught in the machine.
9. Do not allow children to operate this equipment.
10. Before inspecting or servicing any part of this machine, shut off the machine, disconnect the 110 volt power cord and make sure all moving parts have come to a complete stop before allowing people to enter the water.
11. Visually check that all screws, nuts, bolts and other fasteners are properly secured before starting the machine.
12. Check all screws, nuts, bolts and other fasteners for proper tightness once every 50 hours of operation.

1.3 ELECTRICAL SAFETY

1. Use the machine only with extension cords suitable for outdoor use to prevent shock. Suitable extension cords are extremely important for the operator's personal safety. Wire size should be 14 gauge or larger, and the cord should be no longer than 100 feet.
2. Never use an indoor extension cord.
3. Ensure the power cord is in good condition. A cord with cracked or broken insulation is hazardous, particularly in the presence of moisture or combustible material. It is also important that the connectors be of rugged construction, in good condition, and securely attached to the outer jacket.
4. Remove the extension cord immediately from the wall receptacle if the power cord is damaged in any manner.
5. Use only an electric circuit having adequate capacity.
6. Determine the cause and take corrective action if a fuse is blowing or circuit breaker is tripping. Blowing a fuse or tripping a circuit breaker is a warning the machine is overloading, or too many devices are taking power from the circuit, or both. Do not install a higher capacity fuse.
7. Do not abuse the power cord. Never pull a machine by the cord to disconnect it from the receptacle. Keep the power cord away from excessive heat, oil, and sharp edges. Keep power cords out of the water.
8. Disconnect the machine when not in use, before servicing, and when changing attachments.
9. Always use a 110V ground fault circuit interrupter.

1.4 OPERATION SAFETY

1. Operate the WeedRoller on a fairly smooth surface. Each flex coupler assembly allows a 10-degree flex.
2. Check the lake bottom for exposed pieces of metal, rock, bottles, cans, or other foreign objects before running the WeedRoller. Remove the objects to allow the WeedRoller to do a better job and to make the area safer for swimming and water use.
3. Clear visible obstructions from surface area where the WeedRoller will operate.
4. Disconnect the power source and make sure all moving parts are completely stopped before inspecting or servicing any part of the machine.
5. Disconnect the power source and allow the machine to stop if the WeedRoller strikes a foreign object or starts making an unusual noise or vibrating. After stopping the WeedRoller:
   A. Inspect for damage.
   B. Replace or repair any damaged parts.
   C. Check for and tighten any loose parts.
6. Keep the rollers clean of debris and weed accumulations.
7. Do not allow large amounts of material to build up on the rollers. This can cause the machine to stall or cause damage to the drive system.
8. Disconnect the power source if the machine stalls or becomes blocked.
9. Do not move the WeedRoller while it is operating.
10. Disconnect the 110 volt power cord and be sure all moving parts have come to a complete stop before allowing people to enter the water or when adjusting or servicing the WeedRoller. Park the WeedRoller under or beside a dock, or behind or beside boat lifts.
11. Keep people from contacting the roller tube and accidentally injuring themselves by never allowing water activity above or beside the WeedRoller.
12. Never allow people to stand on or dive from the control top or electric motor.

1.5 SAFETY DECALS

Familiarize yourself with all of the safety and operating decals on the machine and the associated hazards. Make certain that all safety and operational decals on this machine are kept clean and in good condition. The decals are shown below at reduced sizes. Apply replacement decals to their original locations.

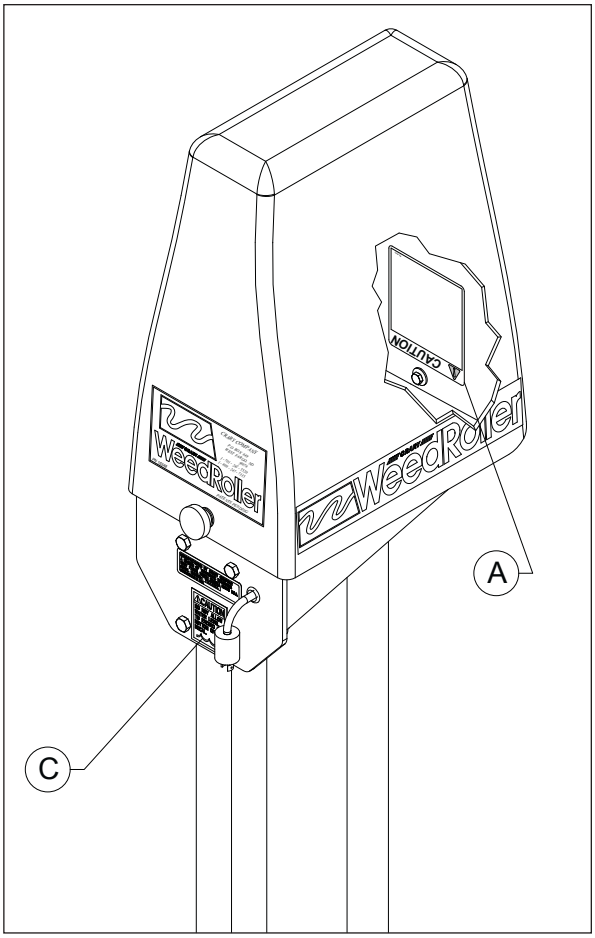

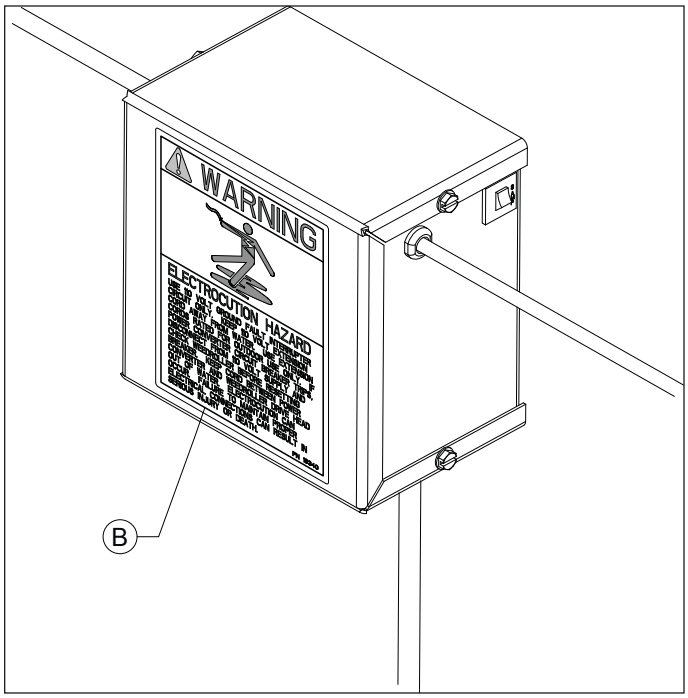

A **PN 16342**

CAUTION

1) Become familiar with the Owner's Manual before attempting to operate this equipment.
2) Always disconnect power converter from 110 volt power cord and be sure all moving parts have come to a complete stop before allowing people in water or when adjusting or servicing the Weedroller.
3) Never allow people in water while WeeRoller is working or plugged in.
4) Be sure reversing switch is adjusted to proper angle.
5) Do not allow children to operate this equipement.
6) Do not allow hands, clothing, or any part of body near any moving part.

For replacement decals or operator's manual, contact your WeedRoller dealer
or Crary Company P.O. Box 849 West
Fargo, ND 58078
1-701-282-5520 or 1-800-247-7335

PN 16342

B **PN 16340**

WARNING

ELECTROCUTION HAZARD

USE 110 VOLT GROUND FAULT INTERRUPTER CIRCUIT ONLY. KEEP 110 VOLT EXTENSION CORD AWAY FROM WATER. USE EXTENSION CORDS RATED FOR OUTDOOR USE ONLY. IF POWER CONVERTER CIRCUIT BREAKER TRIPS, DISCONNECT FROM 110 VOLT SUPPLY AND CHECK WEEDROLLER BEFORE RESETTING BREAKER. KEEP CORD BETWEEN POWER CONVERTER AND WEEDROLLER DRIVE HEAD OUT OF WATER. ELECTROCUTION CAN OCCUR. FAILURE TO MAINTAIN PROPER ELECTRICAL CONNECTIONS CAN RESULT IN SERIOUS INJURY OR DEATH.

PN 16340

C **PN 12611**

CAUTION

DO NOT ALLOW WATER LEVEL TO EXCEED THE BOTTOM OF THIS DECAL.

PN 12611

Section 2 ASSEMBLY

2.1 BEGINNING ASSEMBLY

The WeedRoller comes in three separate boxes. Inspect each box to make sure that no parts are missing.

Box One contains: Drive Head Assembly

Box Two contains: (2) 7' Roller Tubes

Box Three contains: (1) 7' Roller Tube, (1) Flex Coupler Assembly, (1) Roller Adapter Assembly, Mount Brackets and Clamps, Power Source Box and Cord, Assorted Hardware, Operator's Manual

2.2 INSTALL CONTROL TOP COVER KNOB

1. Flip control top cover down.
2. Attach cover knob to control top cover with provided 1/4" x 3/4" bolt and washers. Figure 1
3. Flip control top cover back to original position.

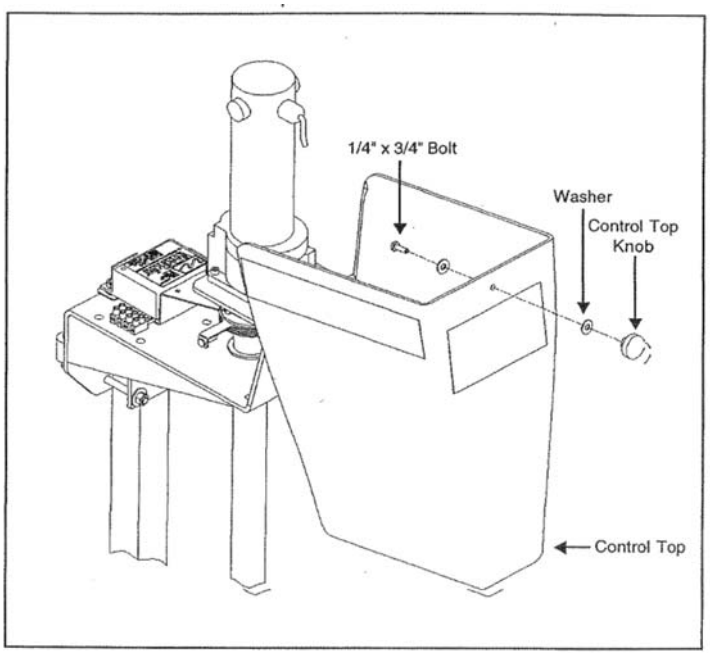

Figure 1: Control Top Knob

2.3 ATTACH DOCK MOUNT BRACKETS

1. Position the bottom bracket **as low as possible** on your dock post. In typical installations, one bracket will be above water and one bracket will be underwater. If one bracket is underwater, use the adjustment knob on the top bracket only.

NOTE

Position the dock mount brackets at least 18" apart (vertically) to give a stable and secure mount for the drive head For increased stability, place the brackets even farther apart.

2. Attach a dock mount bracket to the dock post with either a V-bolt or U-bolt. Use U-bolts when mounting straight off a square dock post. Use V-bolts for docks with round posts or to achieve a 45 degree mount angle off a square post. Secure the bolt with 3/8" washers and nuts (see the following examples).
3. Position the remaining bracket at least 18" above the bottom bracket, insert the V- or U-bolt, and secure with 3/8" washers and nuts. Torque hardware to 30 ft-lbs.

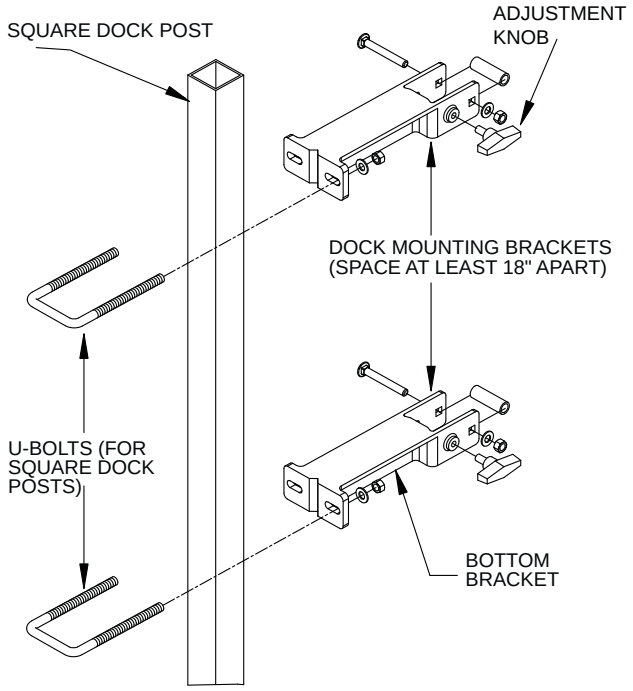

Figure 3: Square Dock Mount Brackets

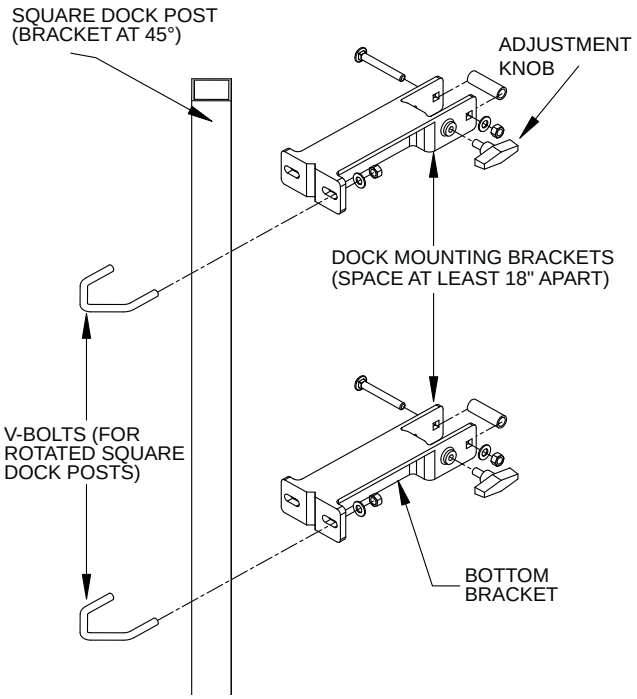

Figure 2: Square Dock Mount Brackets (rotated 45 deg.)

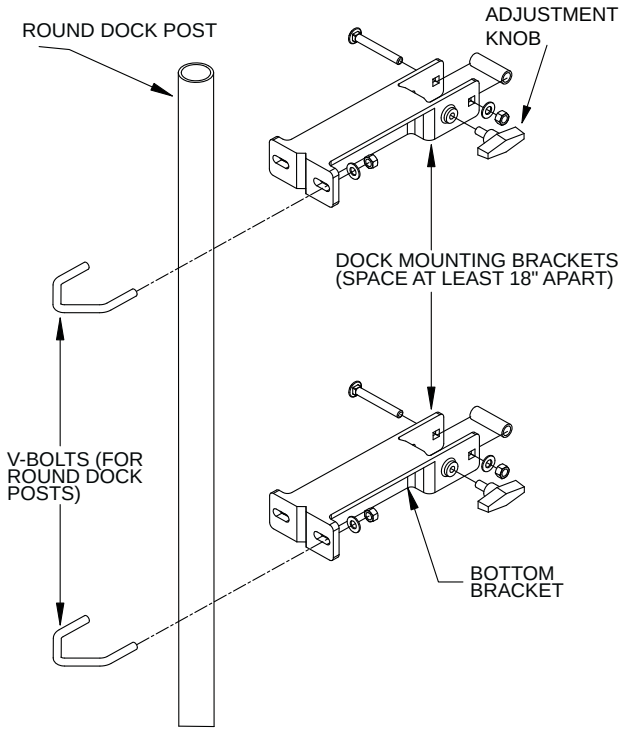

Figure 4: Round Dock Mount Brackets

2.4 CHOOSE CORRECT DOCK MOUNT

Your WeedRoller is capable of many different mountings and degrees of roller arcs. The factors that produce different configurations are:

A. The mount bracket positioning on your dock.

B. The switch arms adjustments. The switch arms easily adjust to set the direction and arc of the rollers. See page 15 for more information..

See examples of different dock mounting locations and roller arcs below.

2.4.1 MOUNTING ON THE OUTSIDE CORNER OF A DOCK WITH A 270 DEGREE ROLLER ARC

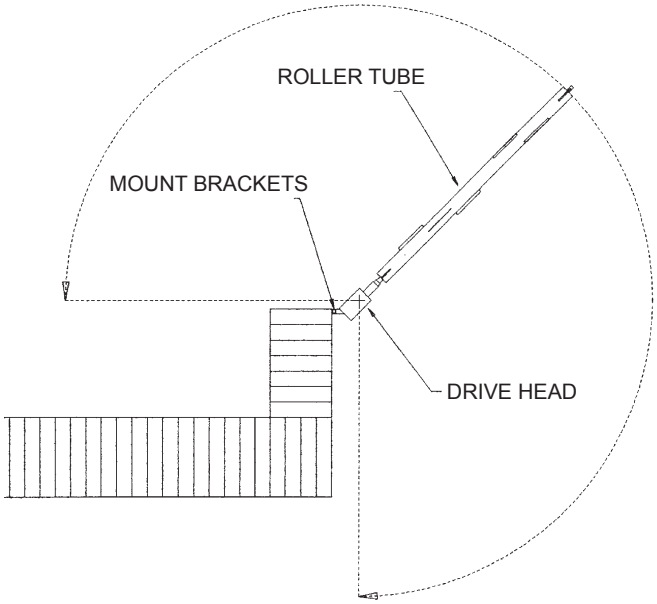

Figure 5: Outside Corner Dock Post Mounting: 270 Degree Arc

2.4.2 MOUNTING ON AN INSIDE CORNER DOCK WITH A 90 DEGREE ROLLER ARC

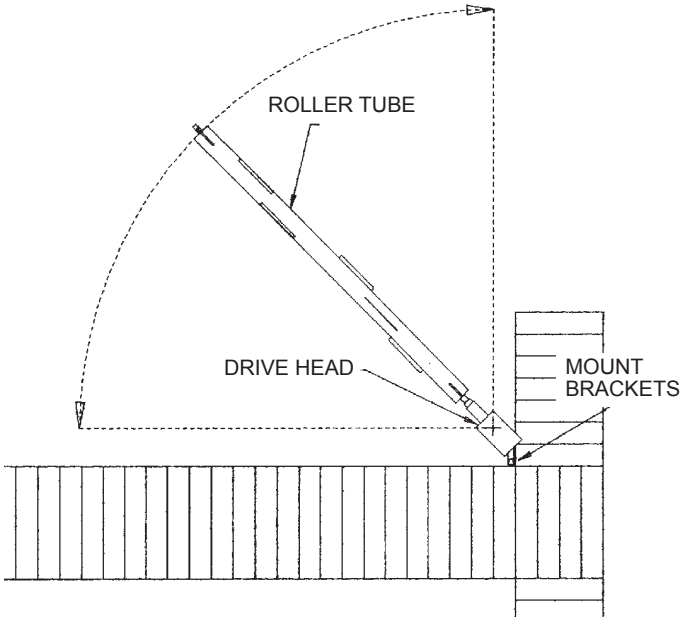

Figure 6: Inside Corner Dock Mounting: 90 Degree Arc

2.4.3 MOUNTING ON AN OUTSIDE CORNER DOCK WITH A ROLLER ARC UP TO 270 DEGREES

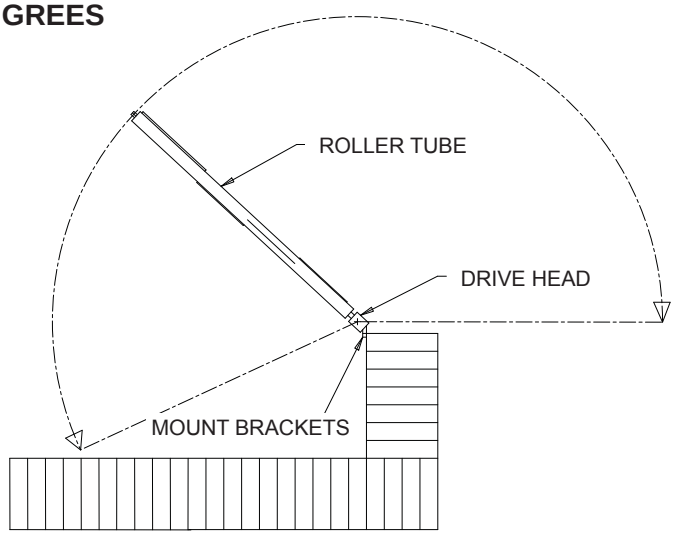

Figure 7: Outside Corner Dock Mounting: Up to 270 Degree Arc (Depending on dock type.)

2.4.4 MOUNTING ON THE SIDE OF A DOCK WITH A 180 DEGREE ROLLER ARC

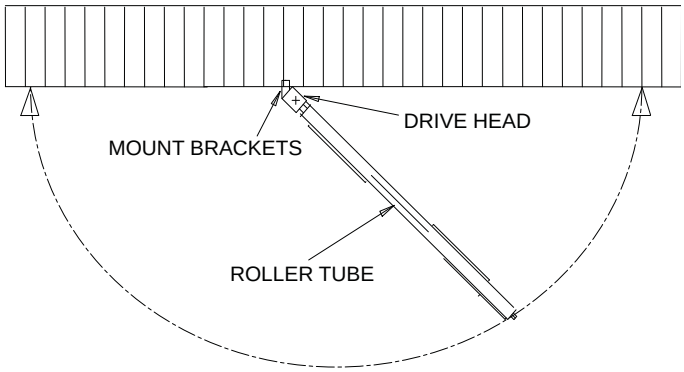

Figure 8: Side of Dock Mounting: 180 Degree Arc

NOTE

When properly used, the WeedRoller is environmentally friendly and welcome by neighbors. Refer to the accompanying guideline manual for information on legal and responsible use.

2.5 CONNECT ROLLER TUBES

1. Connect the roller adapter to the drive head. Figure 9
   A. Slide seal cover disk onto gearbox shaft.
   B. Align the gearbox shaft bolt holes with the bolt holes in the roller adapter.
   C. Install 1/2" bolts, washers, and nuts provided in the owners kit and torque to specs.
2. Connect a 7' roller tube to the roller adapter as shown in Figure 9.
   A. Align the holes in the roller adapter with the bolt holes in a 7"roller tube.
   B. Install 3/8" bolts, washers, and nuts provided in the owners kit and torque to specs.
3. Connect the 7' roller tube to the 7' roller tube installed in step 2.
   A. Align the bolt ends with the bolt holes in the roller tube connected to the gearbox.
   B. Install 3/8" bolts, washers, and nuts provided in the owners kit and torque to specs.
4. Connect the remaining 7' roller tube to the 7' roller tube installed in step 3.
   A. Remove all 3/8" bolts, washers, and nuts from the flex coupler.
   B. Align the bolt ends of the connect roller tube with the bolt holes in one flex coupler end.
   C. Replace the 3/8" bolts, washers, and nuts necessary to secure the flex coupler to the connected roller tube. Torque to specs.
   D. Align the bolt ends of remaining roller tube with the bolt holes in the other flex coupler end.
   E. Replace the unused 3/8" bolts, washers and nuts. Torque to specs.

NOTE

Additional rollers can be added. Maximum number of rollers varies with conditions. WeedRoller warranty is only valid up to a roller length of 35ft. Added tubes may require a special permit for use. Please consult your state and local regulations.

TORQUE CHART			
Standard minimum tightening torque for normal assembly applications			
BOLTS (SAE GR5)		SCREWS	
SIZE	FT.LBS.	SIZE	FT.LBS.
5/16"	20	10-24	3
3/8"	31	1/4" SET	5
1/2"	75	1/2" SET	15
U- OR V-	31		

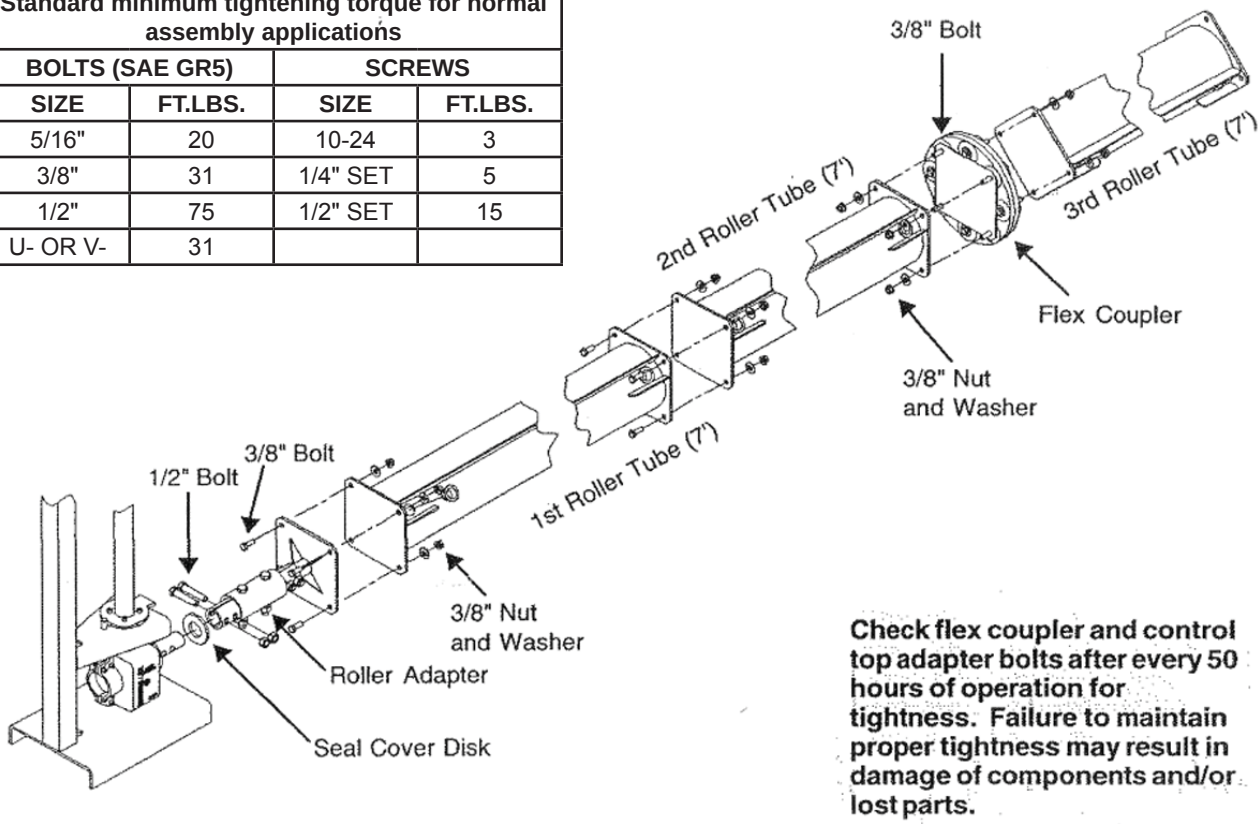

Check flex coupler and control top adapter bolts after every 50 hours of operation for tightness. Failure to maintain proper tightness may result in damage of components and/or lost parts.

Figure 9: Roller Tube Assembly

2.6 CONNECT DRIVE HEAD TO POWER SUPPLY

WARNING

Use extreme caution when working around water and electricity. Be sure to read and understand all warning decals and instructions.

CAUTION

Use a 110 volt ground fault interrupter circuit only. Keep the 110 volt extension cord away from water. Use extension cords rated for outdoor use only. Disconnect WeedRoller from 110 volt supply and check it before resetting the breaker if the circuit breaker trips. Keep the 24 volt power cord out of the water.

The power source is sold only as a complete unit. You can buy electric wiring service parts (wire ends, connectors, switches, and five amp circuit breaker) individually if the power source needs repair or replacement parts. See Figure 10 for Weedroller power supply.

1. Insert the power supply stake into dry land (either your beach or yard). Attach the 70 feet long power supply cord to the connector on the power supply. Route this along your dock frame or fasten it underneath (so it is not being stepped on) and connect it to the WeedRoller drive head.
2. Connect the female end of the power supply cord to the male connector on the control box top assembly.
3. Test the 110 volt outlet with the provided GFI receptacle tester.
4. Connect a 110 volt outdoor extension cord (at least 14 gauge) to the power supply. Make sure to keep this 110 volt extension cord away from the water.
5. Make sure your rollers are clear from obstructions so that they can turn freely. Plug in the 110 volt extension cord. If they are close to your dock and turning towards it, lift the cover on top of the drive head and reverse the smart switch. To reverse:
   A. Move the proximity sensor (brown or white) the rollers are moving towards over the magnet.
   B. Set switch arms to desired arc settings once the rollers have started in reverse direction. Refer to page 15 for further switch arm setting instructions.
   C. Readjust switch as needed.
6. The WeedRoller is now ready to run.

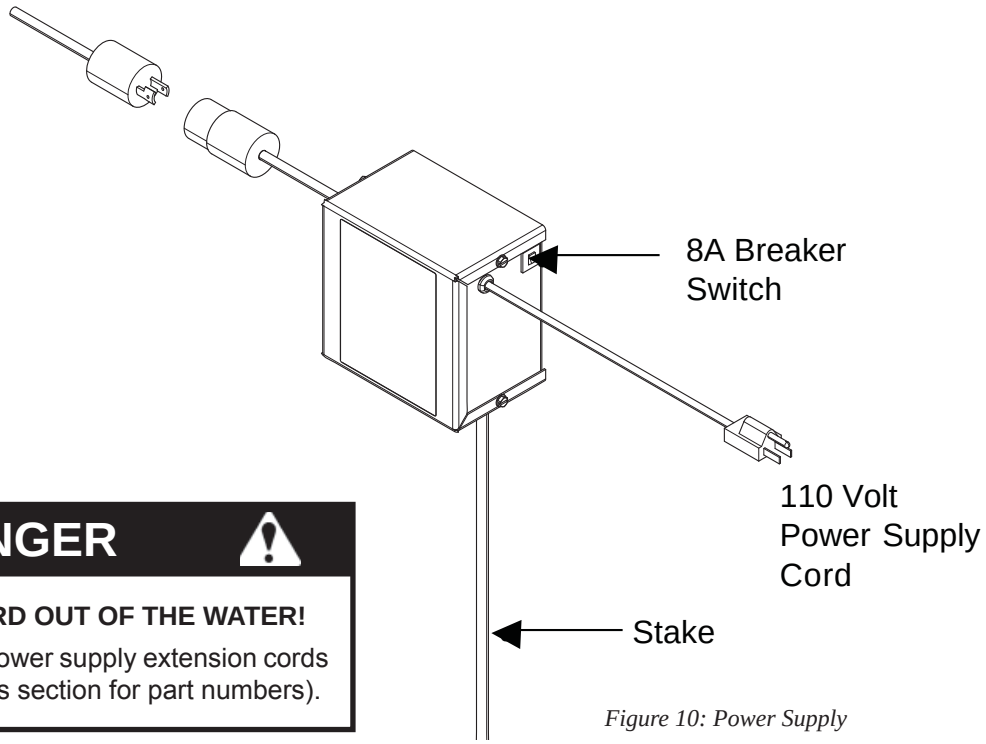

Figure 10: Power Supply

DANGER

KEEP THE 24 VOLT CORD OUT OF THE WATER!

Use 25' and 70' optional power supply extension cords for longer docks (see parts section for part numbers).

3 Section OPERATION

3.1 INITIAL OPERATION

Check the WeedRoller frequently to make sure it is not blocked by debris (branches, rocks, or stumps) when using it for the first time, or anytime it is moved to a new location. Inspect it often until it can move freely over the lake bottom.

- Operate the WeedRoller continuously (when waterfront is not otherwise in use) for initial clearing until area is cleared. Clearing can take from one day to one week.
- Run the WeedRoller often enough to keep the area clear of weeds after it is initially cleared. Typically operation is 10 hours once every week. Time varies with conditions.
- Gather and dispose dislodged weeds to prevent them from floating away and spreading.

NOTE

Typical owner installations will need 400-500 operating hours per season. Excessive use will cause unnecessary wear at shaft and coupler components. Crary Co. warranty covers one season or 1000 operating hours, whichever comes first.

3.2 ADJUSTING THE SWITCH ARMS

During operation, the WeedRoller motor will turn the magnet mounted on the pivot tube in the direction of one of the two switch arms. The proximity sensor mounted on the arm will detect the magnet and signals the smart switch to reverse the direction of the motor. The motor will turn until the other proximity sensor detects the magnet; then the motor will reverse again.

The roller tubes have a maximum arc of 270 degrees. If the switch is set for more than 270 degrees, the motor may hit the rear post weldment during operation. The magnet is positioned on the pivot tube pointing towards the rollers. Adjust the magnet right or left to achieve the desired arc.

The amount of roller tube arc depends on the amount of arc between the proximity sensors mounted on the adjustable switch arms. Adjust the switch arms for desired WeedRoller arc. Position the magnet between the switch arms. Increase the arc between the switch arms for more roller arc. Decrease the amount of arc between the switch arms for less roller tube arc.

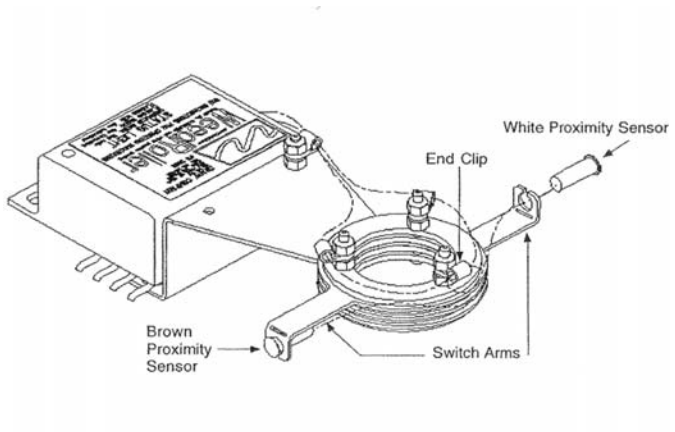

Figure 11: Switch Mount Assembly

PROTECTION CIRCUITRY OPERATION

The smart switch has a protection circuit that monitors the WeedRoller motor current draw. During normal operation, the motor will draw about 2.0 amps.

The green light on the smart switch stays lit when the WeedRoller is operating normally.

The switch reverses the motor before the roller tubes complete the arc set by the switch arms if the motor draws more amps than the maximum amp draw for more than three seconds.

The green light flashes if the protection circuitry activates.

The counter resets automatically if the roller tubes complete the arc set by the switch arms before the counter gets to six.

The light flashes red if the motor rotor locks or if the motor short circuits.

LOAD REVERSE

The smart switch is designed for varying conditions. Inital setting from the factory is 5.5 amp draw.

The smart switch tracks the amp draw for 10 cycles (sweeps) and resets the maximum amp draw (used to reverse the motor caused by an overload conditions) automatically based on conditions.

- Example: The initial setting is 5.5 (maximum) amp draw when the WeedRoller is first used. The smart switch records a 3 amp draw (highest amp draw during 10 cycles) and resets the maximum amp draw from 5.5 amp draw to 3.5 amps. (.5 amps above peak current of 3 amps). The smart switch now reverses the WeedRoller tubes if the motor draws 3.5 amps or more.

The smart switch continues to monitor the amp draw and reset the maximum amp draw each 10 cycles as previously explained.

RESETTING THE ELECTRONIC CONTROLLER

Check for stuck roller tubes or obstructions before resetting the smart switch. See Preventing Problems Caused by Muddy Conditions on page 11 for more information on operating the WeedRoller in these conditions. Reset smart switch if adjusting the switch arms or moving the WeedRoller.

3.3 PREVENTING PROBLEMS CAUSED BY MUDDY CONDITIONS

In extremely muddy or weedy conditions the WeedRoller may become stuck. The following is a list of procedures that will help under these conditions. Try one, or a combination of as many are needed, until the WeedRoller can complete its arc without becoming stuck.

1. Decrease roller arc to 50 degrees. When rollers begin to move freely, extend arc in 50 degree increments.
2. Remove yellow roller tube caps. Drain water as necessary from roller tubes to increase flotation. Replace caps.
3. Install a Crary Mud Kit. Order the Wood Buoy Mud Kit (part #51128) for moderately muddy conditions. Order the Plastic Pipe Mud Kit (part #51134) for extremely muddy conditions. See following page for illustrations.

NOTE

For special mounting situations, the "Universal Mounting Hardware" (# 51082) offers telescoping brackets for more demanding situations.

3.4 ADJUSTING THE DOCK MOUNTING BRACKETS FOR MUDDY OR UNEVEN LAKE BOTTOMS

The adjustable dock mounting brackets allow you to position the WeedRoller in a variety of different ways.

For very weedy or mucky conditions, adjust the drive head assembly so its base is a few inches from the lake bottom, then tighten the adjustment knobs. This will raise the roller tubes slightly and make it easier for them to clear the weeds and muck.

If the lake bottom is uneven, or covered with small rocks or branches, you can leave the adjustment knobs off. This will allow the drive head to slide up and down freely on the rear post weldment and allow the roller tubes to conform to slight variances in the lake bottom. Make sure to clear as many rocks and branches as possible from the lake bottom before using the WeedRoller.

3.5 OFF-SEASON STORAGE

- The WeedRoller may be left in the lake year around if the lake does not freeze over. If you are on a lake that freezes over, remove the WeedRoller and store it for the winter.
- The complete unit may be attached to your roll away dock and stored with it. Raise your dock to lift the drive head off the ground and fasten each roller assembly to your dock for easy storage. If stored outside, cover the drive head and box area with a plastic bag or cover to avoid harsh weather conditions.
- The unit can be disassembled into four separate sections: the drive head assembly, and three individual rollers which may be stored indoors. Be sure to drain water from rollers and drive head before storage.
- It is normal for the drive head to fill with water. When bringing the drive head into shore, let the water slowly drain through the bottom shaft seal (this may take several hours). Tipping the unit to drain from the top end will unnecessarily expose the motor and electrical components to water.

NOTE

Be sure to drain the water from the rollers before storage if freezing is possible.

SERVICE & MAINTENANCE

WARNING

Before inspecting or servicing any part of the machine, unplug the power source and make sure all moving parts have come to a complete stop. Remove complete unit from the water before starting repair.

4.1 TRIPPED CIRCUIT BREAKER

The power converter has one 8 amp circuit breaker on the 24 volt DC side (Figure 12). If it trips:

1. Disconnect the power converter from the 110 volt supply and inspect before resetting the breaker.
2. Clear weeds and/or obstructions from the rollers or arc before restarting.

NOTE

Blowing a fuse or tripping the circuit breaker is a warning that you have overloaded the circuit. Determine the cause and correct it.

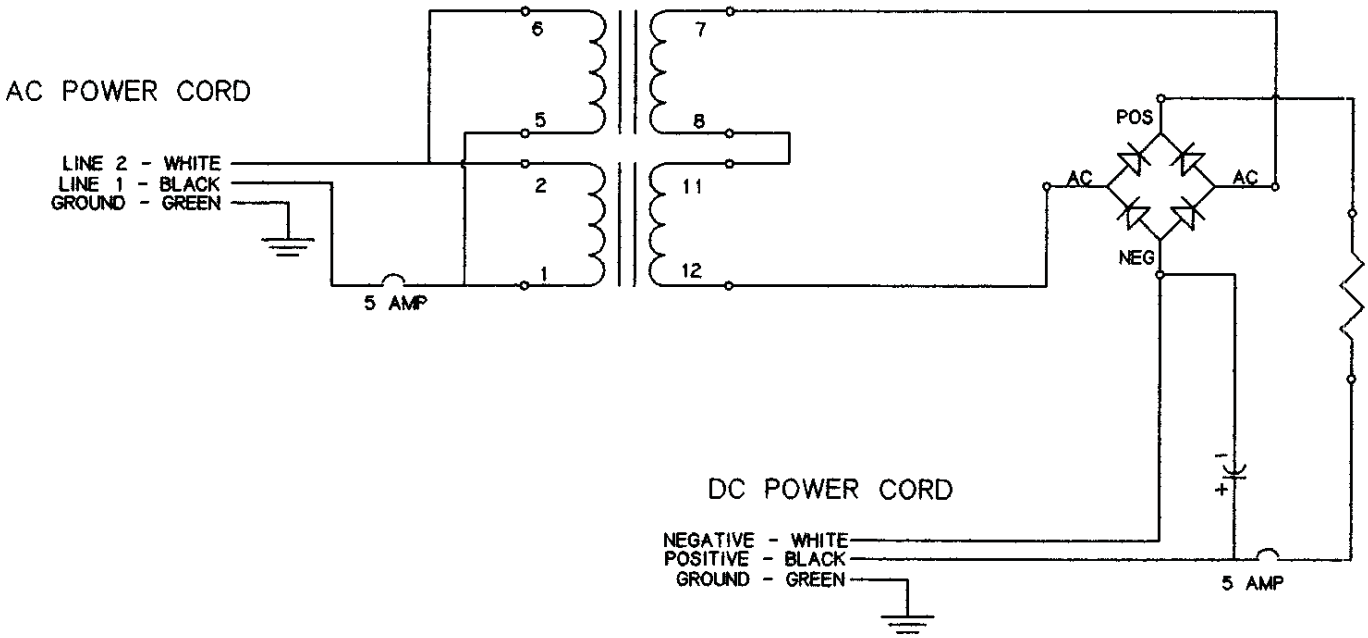

Figure 12: Electric Wiring Schematic

4.2 SERVICING MOTOR ASSEMBLY

The electric motor assembly is only serviceable as a complete unit. To service motor:

1. Disconnect plug-in on control top from power supply.
2. To remove the motor:
   - A. Flip cover back.
   - B. Loosen the screws on terminal strip connector to free motor wires. Pull wires through holes in the mounting plate weldment.
   - C. Loosen the four 1/4" nuts and remove bolts fastening the motor to the mount plate weldment.
   - D. Lift motor off.
   - E. Loosen the set scres (2) securing the hex coupler and remove the hex coupler.
3. Install the new motor and secure by following the remove the motor instructions in reverse order.

NOTE

Check flex coupler, roller tube, mounting bracket, and drive head adapter bolts every 50 hours of operation for tightness and wear. Failure to maintain Failure to maintain proper tightness may result in damage or excessive wear of components and/or lost parts.

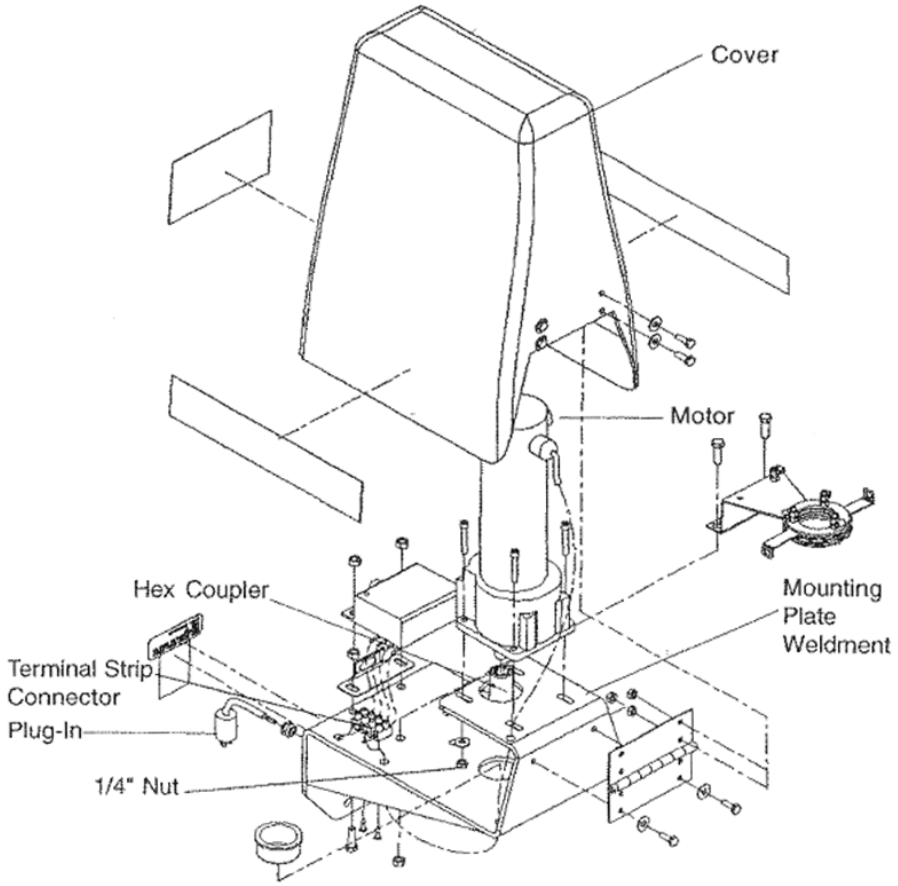

Figure 13: Controller Top Assembly

4.3 REPLACING ROLLER FLEX COUPLER

1. Obtain a replacement coupler kit (#51192) from your WeedRoller dealer.
2. Remove the 3/8 inch nuts that secure the roller tubes and coupler. Separate tubes and remove existing coupler (Figure 14).
3. Push the new bushings into holes on one side of both new flex coupler beltings. Align the bolt holes on the two flex coupler beltings.
4. Insert one bolt through both holes in flex coupler beltings; skip a hole, and insert another bolt.
5. Repeat step 4 until you have inserted four bolts in one side. Insert the remaining bolts through the four open holes on the opposite side on the flex coupler belting.
6. Place a new wear plate over the bolt ends on one side of the flex coupler belting. Insert the bolt ends into the bolt holes on one roller tube and secure with 3/8 inch washers and nuts. Repeat to attach opposite coupler side to remaining tube end.

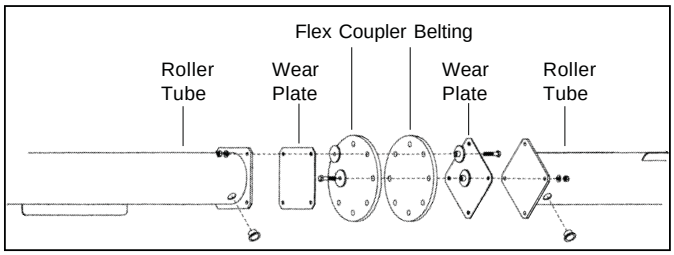

Figure 14: Replacing Flex Coupler

NOTE

Check flex coupler drive head adapter bolts every 50 hours of operation for tightness. Failure to maintain proper tightness may result in damage of components and/or lost parts.

4.4 REPLACING THE GEARBOX

1. Remove roller tubes and seal cover.
2. Remove 1/4" x 1-1/2" screws (4) securing the pivot tube weldment to the gearbox.
3. Install all replacement parts in correct order. (Figure 15)
4. Insert and tighten 1/4 x 1-1/2" screws (4) removed in step 2.

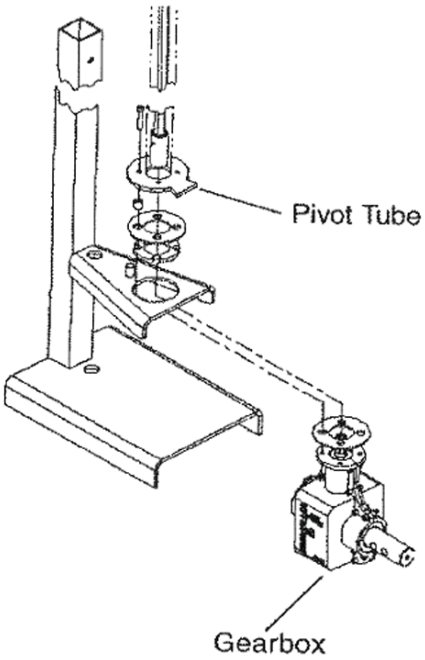

Figure 15: Replacing the Gearbox

4.5 INSTALL A NEW MAGNET

1. Open the WeedRoller cover.
2. Loosen machine scre secured by locknut.
3. Snap magnet off magnet mount assembly.
4. Snap replacement magnet on magnet mount assembly.
5. Tighten locknut to secure machine screw.

4.6 INSTALLING OR REPLACING THE SMART SWITCH

See control top assembly diagram on page 26 for identification of parts. **Make sure WeedRoller is disconnected from AC power source before installing/replacing switch.**

INSTALL A NEW SWITCH (REFER TO PAGE 20)

1. Open the WeedRoller cover.
2. Remove two 5/16" hex nuts from the side of the smart switch.
3. Loosen 4 locknuts securing the wire clip assemblies on top of the switch mount assembly.
4. Remove two proximity sensors form the switch mount assembly.
5. Loosen four screws on the terminal strip securing the black (input), white (input), red (output), and black (output) wire. Refer to diagram below.
6. Remove smart switch. Reinstall smart switch by repeating steps in reverse order.

4.7 ATTACH THE PROXIMITY SENSORS

1. Thread proximity sensors through wire clips ensuring they loop around the end clip. Refer to diagram below.
2. Press each proximity sensor into the corresponding notch in the switch arm.
3. Make sure enough wire is allowed for each switch arm to rotate a full 180 degrees.

For switch arms operating instructions, see page 10

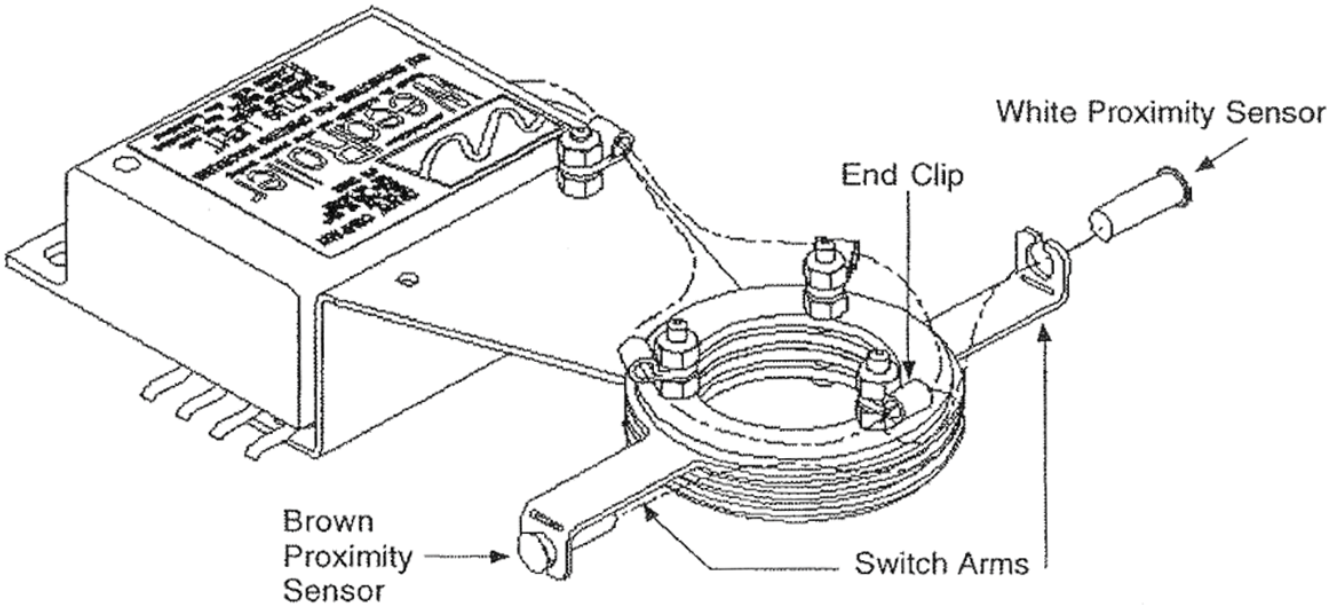

Figure 16: Proximity Sensors

5 Section TROUBLESHOOTING

5.1 TROUBLESHOOTING

PROBLEM	POSSIBLE CAUSE	REMEDY
WeedRoller will not run.	A. No electrical current. B. 8 amp breaker kicked out. C. Smart switch bad D. Smart switch shutdown E. Electric motor problems. F. Power supply failure.	A. Check all connections. B. Check for obstructions or electrical problems, reset breaker. C. Check connections, check switch arm adjustment. Replace switch. D. Disconnect power from controller, allow to reset. E. Check connections, check wiring, repair or replace electric motor. F. Repair or replace.
Rollers will not turn.	A. Drive coupler problems. B. Obstruction stopping roller movement. C. Weeds wrapped around rollers. D. Electric motor not working. E. Rollers stuck in mud, muck, silt. F. Gearbox failure.	A. Check all drive coupler connections and components, repair or replace. B. Clear all obstructions from lake bed area. C. Clear weeds from roller. D. Repair or replace. E. Free stuck rollers. F. Replace gearbox.
Rollers will not switch directions.	A. Reversing switch not working. B. Drive coupler problems	A. Check all connections, repair and replace switch. B. Check connections and components. Repair if needed.
Rollers running at wrong arc.	A. Spring switch arm stops set wrong. B. Drive head at wrong mounting angle. C. Drive head contacts tube weldment before desired roller arc is completed.	A. Adjust reed arms. B. Change drive head angle. C. Change drive head angle.

6.1 AC WEEDROLLER SERVICE RECORDS

DATE / SERVICED BY / MAINTENANCE						
BEFORE RE-INSTALLATION (SHAFT DRIVE)						
CHECK GEARBOX GREASE (REPLACE ANNUALLY)						
CHECK PLASTIC SANDWICH PACK						
CHECK MOTOR AND GEARBOX FOR OIL LEAKS						
CHECK SMART SWITCH						
RUN UNIT IN BOTH DIRECTIONS						
CHECK WIRES FOR CORROSION						
CHECK ROLLER TUBES FOR WEAR						
CHECK TUBE COUPLERS						

6.2 DC WEEDROLLER (GEARBOX) TROUBLESHOOTING FLOW CHART 1

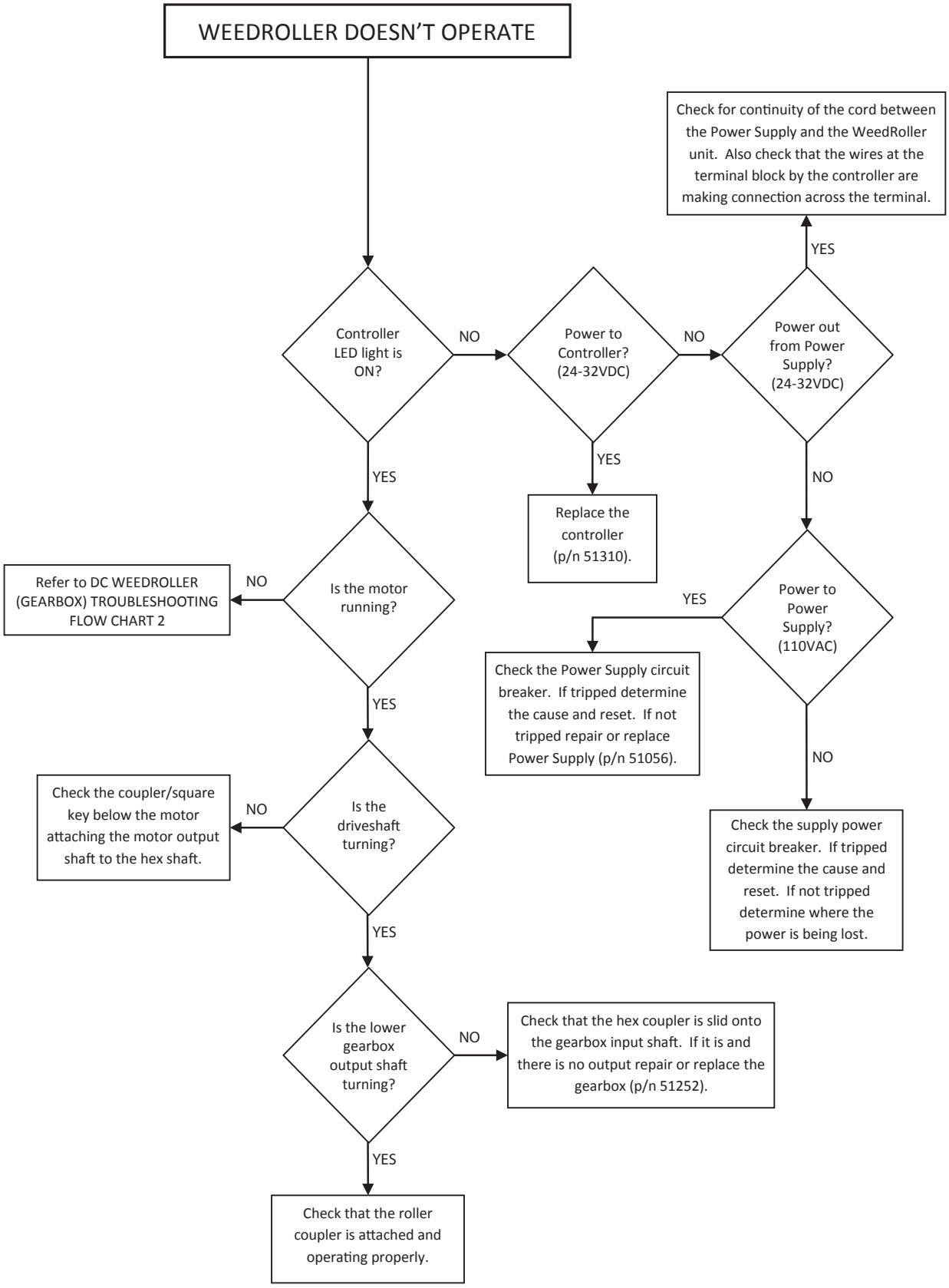

6.3 DC WEEDROLLER (GEARBOX) TROUBLESHOOTING FLOW CHART 2

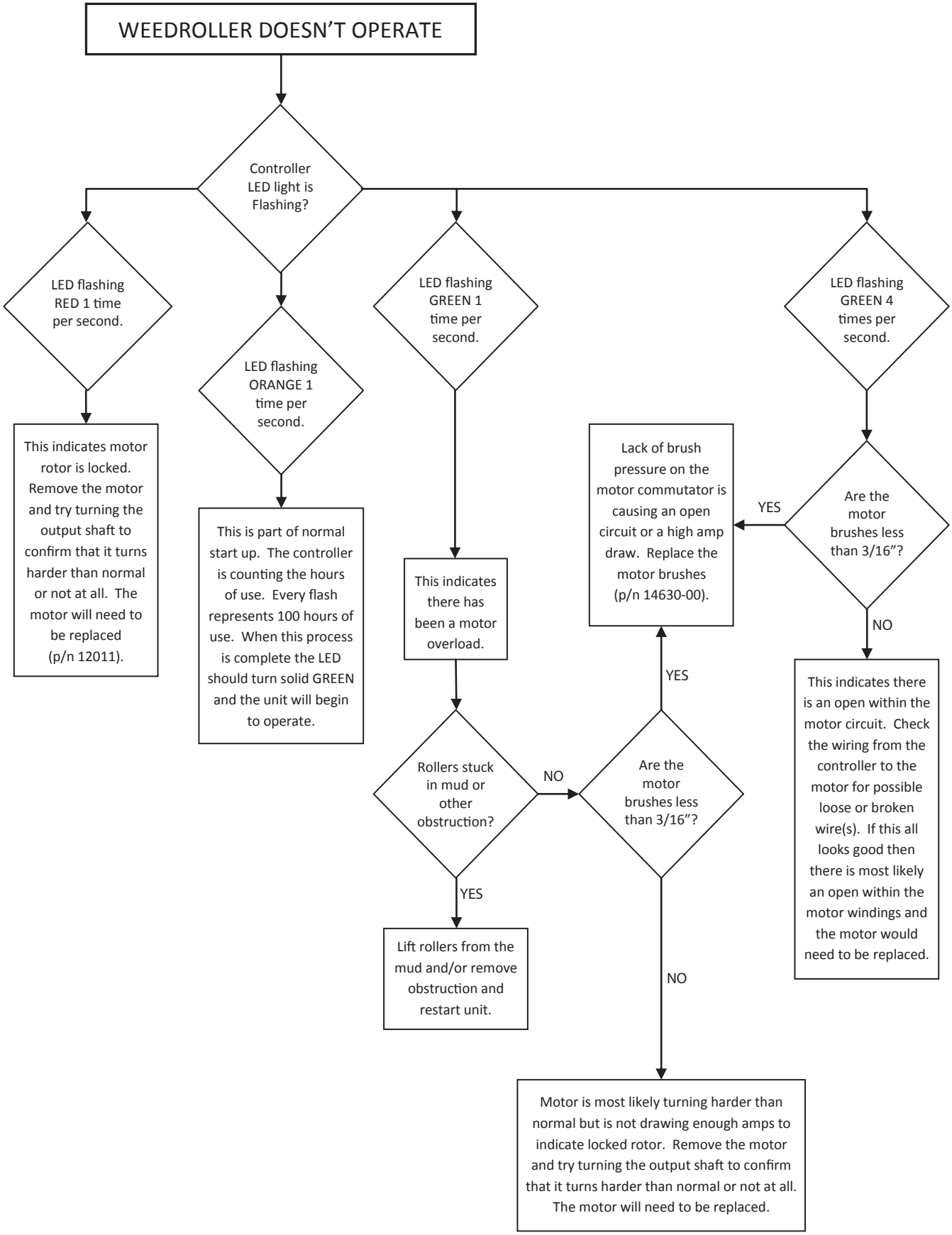

6.4 DC WEEDROLLER WIRING DIAGRAM

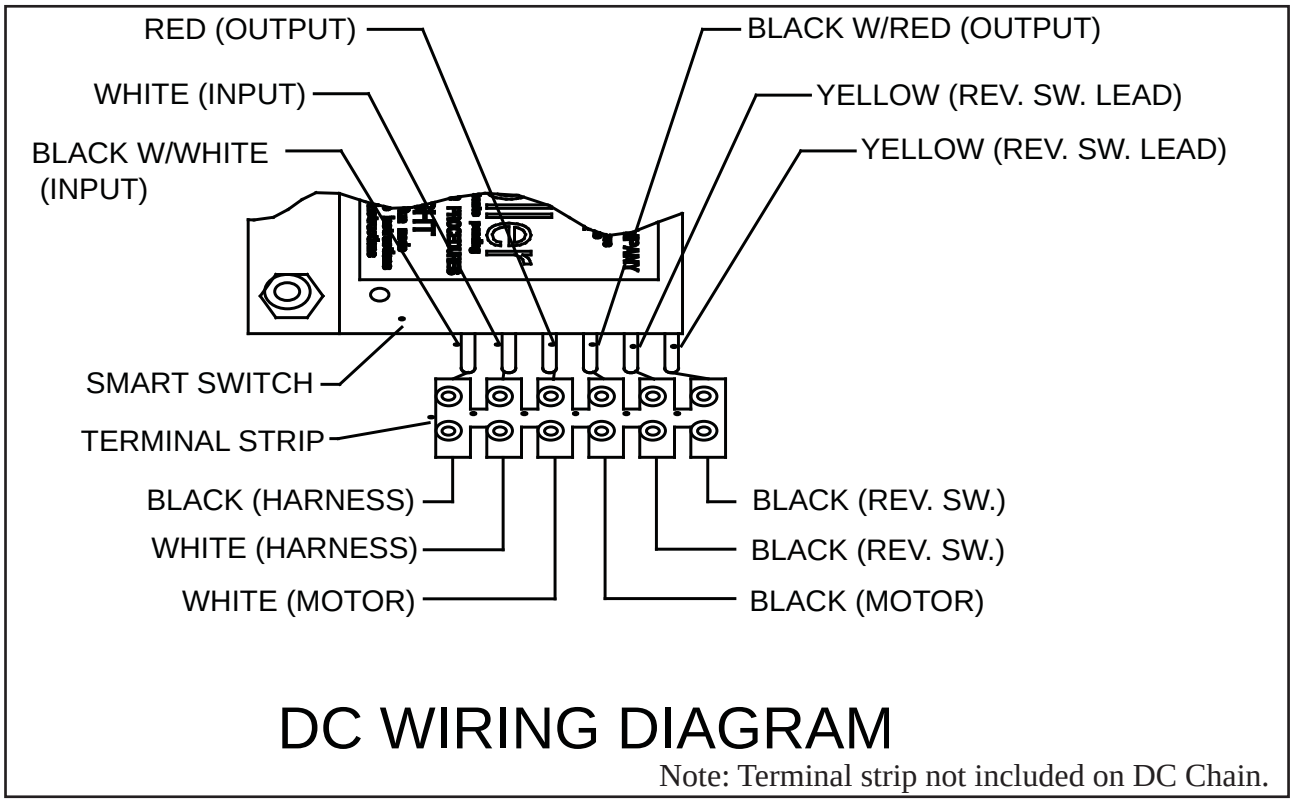

DC WIRING DIAGRAM

Note: Terminal strip not included on DC Chain.

6.5 WEEDROLLER HISTORY

WEEDROLLER HISTORY										
MFG. YEAR	WEEDROLLER MODEL	SUPPLY POWER TO POWERHEAD		MOTOR INFORMATION		CONTROLLER (SMART SWITCH)			DRIVE TYPE	
		24VDC	28VAC	STARTING CAPACITOR	MFG.	TOGGLE SWITCHES	ELECTRONIC	MFG.	CHAIN	GEARBOX
1993	51201/51094	×		N/A	REA (SQUARE BODY)	×			×	
1994	51201/51094	×		N/A	REA (SQUARE BODY)	×	OPTIONAL	FALCON	×	
1995	51201/51094	×		N/A	REA (SQUARE BODY)	×	OPTIONAL	FALCON	×	
1996	51201/51094	×		N/A	REA (ROUND BODY)		×	FALCON	×	
1997	51201/51094	×		N/A	BISON		×	FALCON	×	
1998	51201/51094	×		N/A	BISON		×	FALCON	×	
1999	51298	×		N/A	BISON		×	FALCON		×
1999	51298	×		N/A	BISON		×	HICOUNTRY		×
2000	51298	×		N/A	BISON		×	HICOUNTRY		×
2000	51325		×	200MF	VON WEISE		×	HICOUNTRY		×
2001	51325		×	200MF	VON WEISE		×	HICOUNTRY		×
2002	51325		×	200MF	VON WEISE		×	HICOUNTRY		×
2003	51325		×	200MF	VON WEISE		×	HICOUNTRY		×
2004	51325		×	200MF	VON WEISE		×	HICOUNTRY		×
2005	51325		×	200MF	VON WEISE		×	HICOUNTRY		×
2006	51325		×	200MF	VON WEISE		×	HICOUNTRY		×
2007	51325		×	200MF	VON WEISE		×	HICOUNTRY		×
2008	51325		×	200MF	VON WEISE		×	HICOUNTRY		×
2009	51325		×	200MF	VON WEISE		×	HICOUNTRY		×
2009	51325		×	175MF	BISON		×	HICOUNTRY		×
2010	51325		×	175MF	BISON		×	HICOUNTRY		×
2011	51325		×	175MF	BISON		×	HICOUNTRY		×

PARTS CATALOG

WEEDROLLER

MODEL

51298
DC GEARBOX WEEDROLLER

TABLE OF CONTENTS

DESCRIPTION **PAGE**

ADDITIONAL 7 FOOT ROLLER WITH FLEX COUPLER (OPTION) 43
CONTROL TOP ASSEMBLY 28
DECALS 44
DOCK MOUNTING HARDWARE KIT (OPTION) 37
DOCK MOUNT KIT 24
DRIVE HEAD ASSEMBLY 26
EXTENSION CORDS (OPTION) 36
FLEX COUPLER REPLACEMENT (OPTION) 42
FLEX COUPLE/TUBE 31
MUD KIT (OPTION) 38
PLASTIC PIPE MUD KIT (OPTION) 39
POWER SUPPLY 32
SEVEN FOOT ROLLER TUBE/COUPLER 30
TRIPOD (OPTION) 34
WEEDROLLER TALL EXTENSION KIT (DEEP WATER EXTENSION) (OPTION) 40

DRIVE HEAD ASSEMBLY

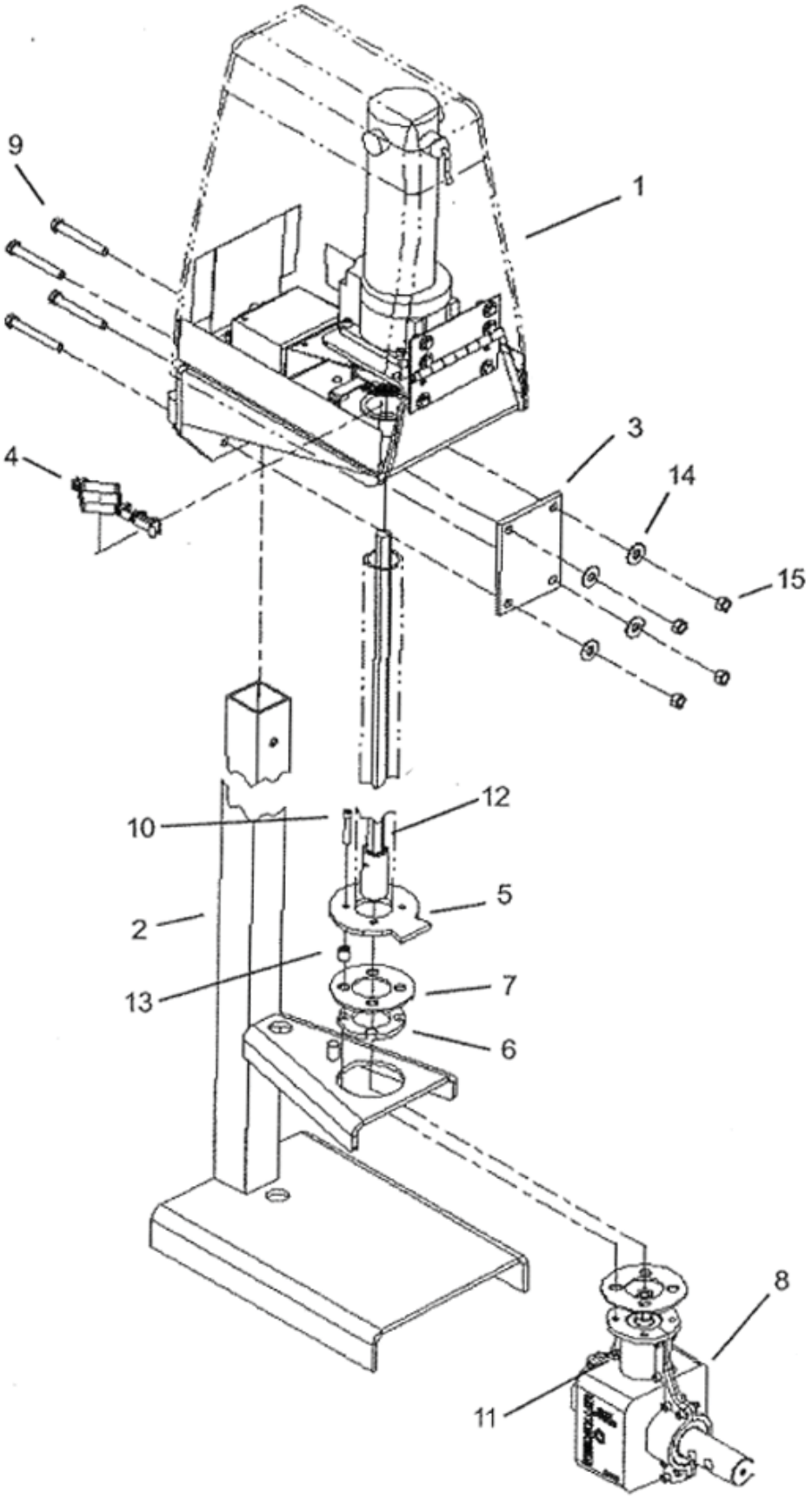

ASSEMBLY, CONTROL TOP			
ITEM	**PART NUMBER**	**DESCRIPTION**	**QTY.**
1	51247	ASSEMBLY, CONTROL TOP	1
2	51245	REAR POST WLDMT	1
3	51280	PLATE, CONTROL TOP MOUNT	1
4	51269	MAGNET MOUNT ASSEMBLY	1
5	51244	PIVOT TUBE WLDMT	1
6	51251	DISC, SANDWICH PACK	1
7	51249	DISC, SANDWICH PACK	2
8	51252	GEARBOX, RIGHT ANGLE 2.3:1	1
9	15009	BOLT 3/8*3 GR5 HEX CAPSCREW ZP	4
10	15532	SCREW 1/4*1-1/2" SKT HD CAP	4
11	15087	NUT, 1/4 CENTERLOCK NC ZP	4
12	51274	5/8 HEX SHAFT WLDMT	1
13	51287	SPACER, GEARBOX MOUNT	4
14	15031	WASHER, 3/8" FLAT ZP	4
15	15042	NUT, 3/8" HEX NC ZP	4
	12487	GREASE, LUBRIPLATE (NOT SHOWN)	

CONTROL TOP ASSEMBLY

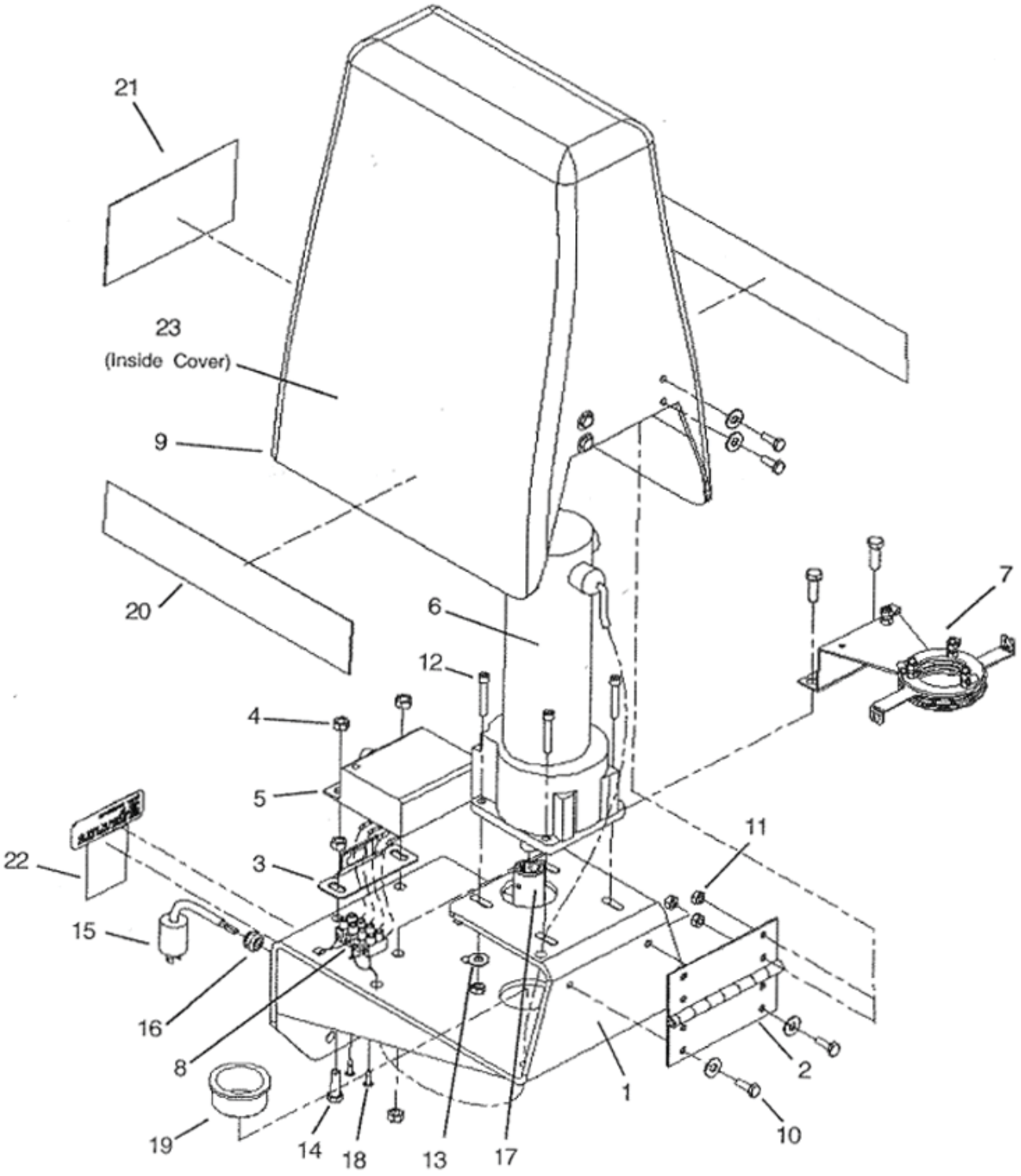

CONTROL TOP ASSEMBLY

ASSEMBLY, CONTROL TOP			
ITEM	**PART NUMBER**	**DESCRIPTION**	**QTY.**
1	51246	WELDMENT, MOUNT PLATE	1
2	51262	HINGE	1
3	51270	STOP, WR COVER	1
4	15153	NUT, 5/16 HEX NC - ZP	6
5	51310	KIT, SMART SWITCH REPLACEMENT	1
6	12011	MOTOR ASSY, DC WEEDROLLER	1
7	51258	ASSY, SWITCH MOUNT	1
8	12466	CONNECTOR, 8 POLE TERMINAL STRIP	1
9	51292	ASSEMBLY, WR COVER	1
	16342	DECAL, INSTRUCTIONS WEEDROLLER	1
10	15001	BOLT, 1/4 X 3/4 GR5 HEX HD ZP	6
11	15105	NUT, 1/4" HEX NC ZP	10
12	15532	SCREW 1/4 X 1-1/2" SKT HD CAP	4
13	15030	WASHER, 1/4" FLAT ZP	10
14	15219	BOLT 5/16 X 1" GR5 HHCS NC ZP	4
15	51267	WIRE HARNESS	1
16	16376	GROMMET 9/32 X 1/4	1
17	12479	5/8" HEX COUPLER, 1-1/8 X 2-1/2"	1
18	15592	SCW WOOD, #8X5/8 PAN PHP	2
19	12483	FLANGE BUSHING, PLASTIC 1 X 2 X 1/8	1
20	16349	DECAL, WEEDROLLER	2
21	16348	DECAL, CRARY WEEDROLLER	1
22	12611	DECAL, CAUTION WATER LEVEL	1
23	16342	DECAL, INSTRUCTIONS WEEDROLLER	1
	15372	SQUARE KEY, 3/16" X 1.00"LG (NOT SHOWN)	1

SEVEN FOOT ROLLER TUBE/COUPLER

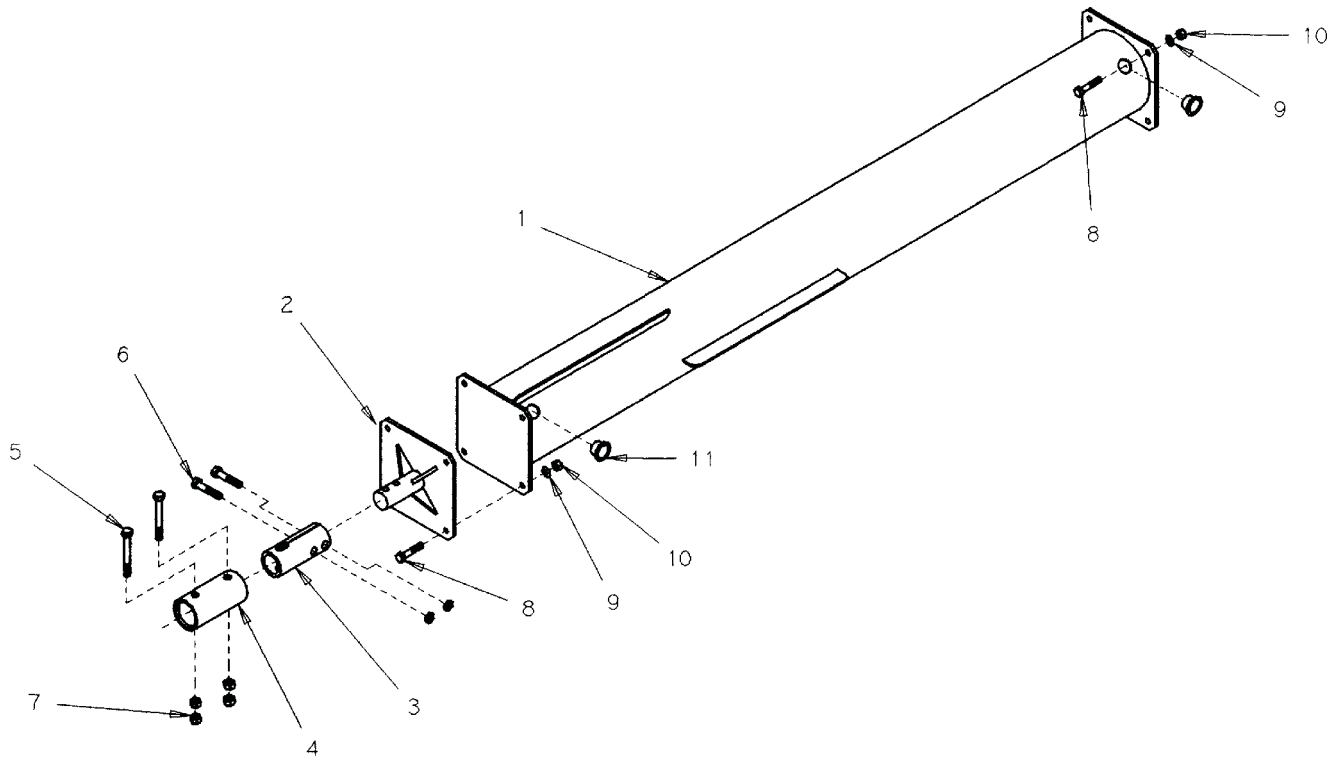

SEVEN FOOT ROLLER TUBE/COUPLER			
ITEM	**PART NUMBER**	**DESCRIPTION**	**QTY.**
1	51290	WELDMENT, 7' WR TUBE	1
2	51213	WELDMENT, STEEL ADAPTOR	1
3	51059	WEEDROLLER BUSHING	2
4	51060	WEEDROLLER COUPLER	1
5	15549	BOLT,1/2" X 3-3/4" HCPS	2
6	15092	BOLT, 1/2" X 2-1/2" HCPS	2
7	15043	NUT, 1/2" UNC HEX	6
8	15006	BOLT, 3/8" X 1" UNC HCS	8
9	15031	WASHER, 3/8" FLAT	8
10	15051	NUT, 3/8" SERR FLNG	8
11	16580	PLUG, 1" TUBE	2

FLEX COUPLE/TUBE

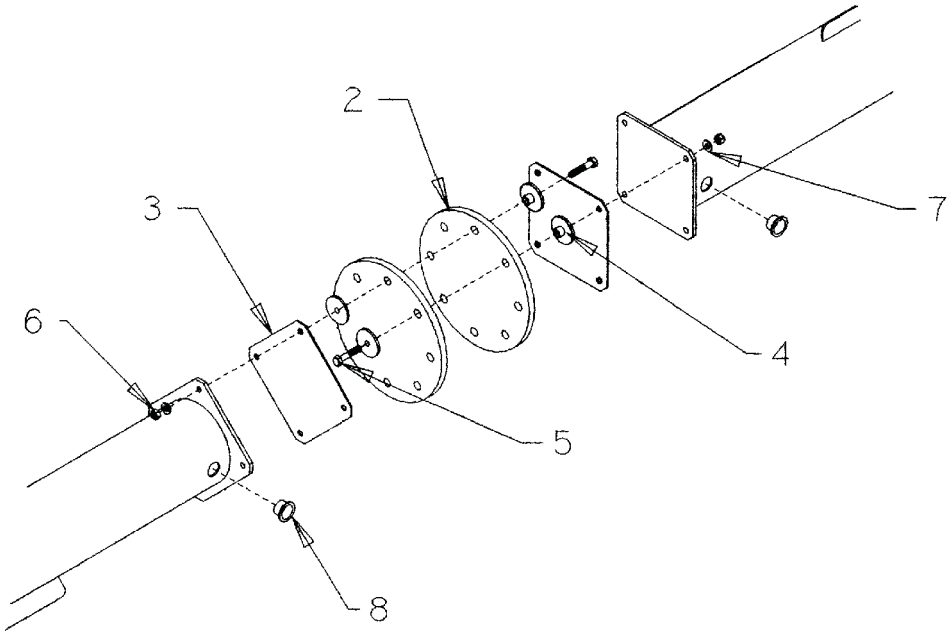

51192 FLEX COUPLER/TUBE			
ITEM	**PART NUMBER**	**DESCRIPTION**	**QTY.**
2	51154	FLEX COUPLER	2
3	51164	WEAR PLATE, FLEX COUPLER	2
4	51163	BUSHING, FLEX COUPLER	16
5	15116	BOLT, 3/8" X 2-1/2" UNC HCS	8
6	15051	NUT, 3/8" SERR FLNG	8
7	15031	WASHER, 3/8" FLAT	8
8	16580	PLUG, 1" TUBE	2

POWER SUPPLY

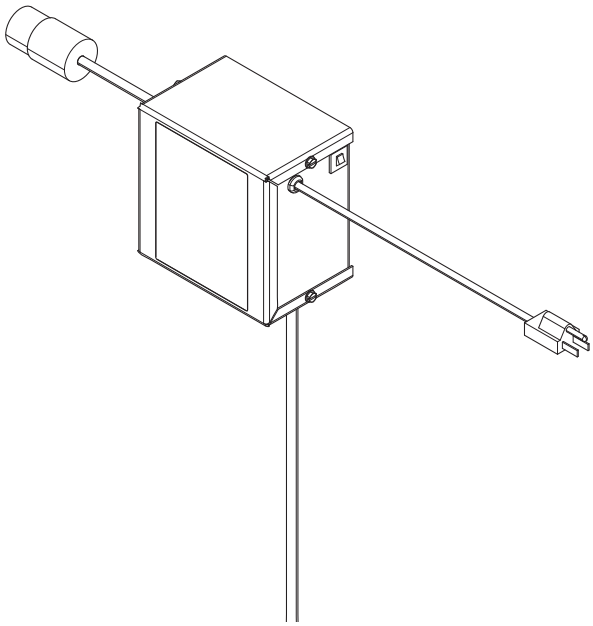

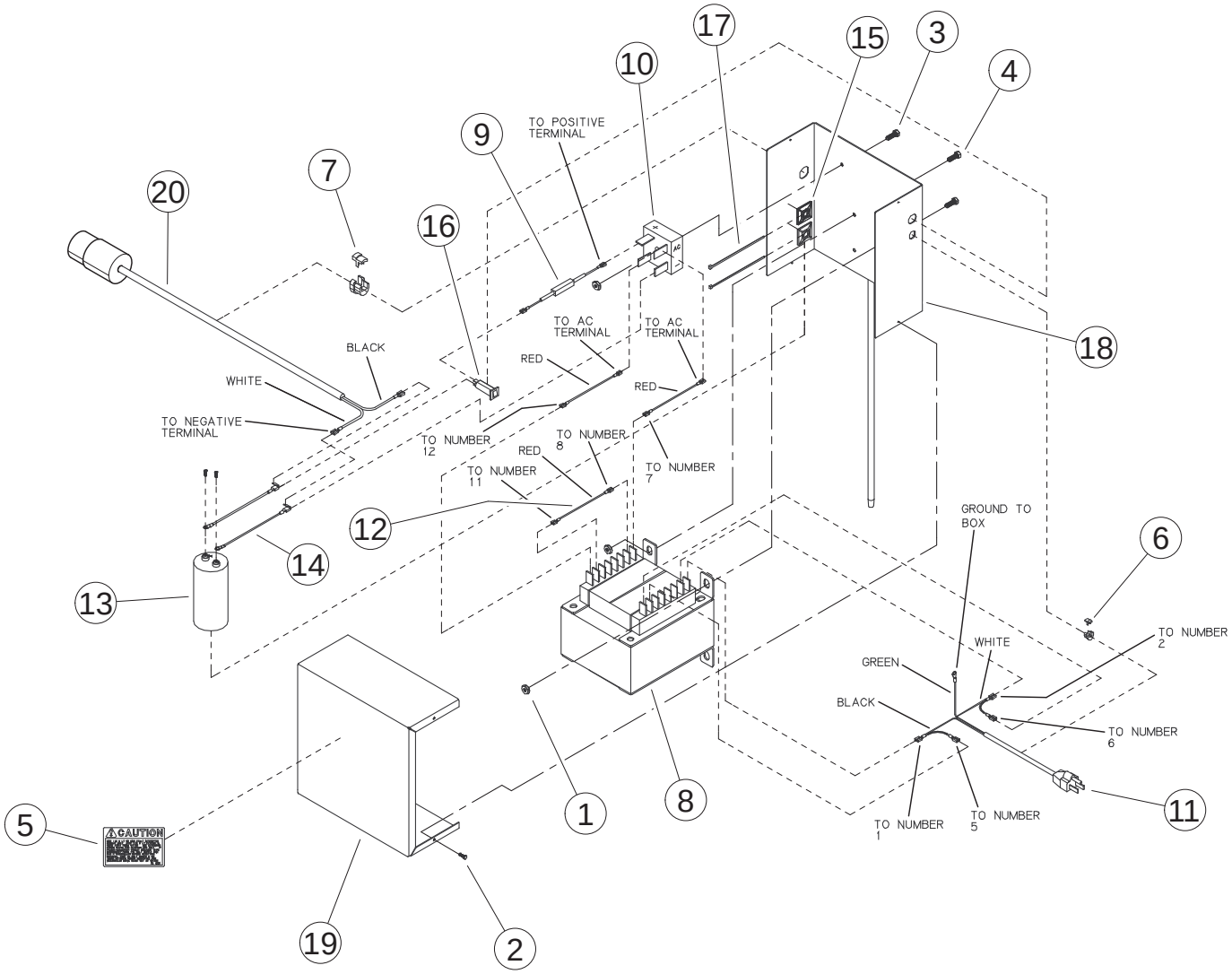

POWER SUPPLY

51056 - POWER SUPPLY			
ITEM	**PART NUMBER**	**DESCRIPTION**	**QTY.**
	16762	8 AMP CIRCUIT BREAKER	
	16439	110 VOLT POWER SUPPLY CORD	
	12472	QUICK CONNECTOR	

ASSEMBLY, POWER SUPPLY (51056)			
ITEM	**PART NUMBER**	**DESCRIPTION**	**QTY.**
1	15134	NUT, 10-24 HEX MACHINE ZP	5
2	15187	SCREW #10 * 1/2 HWH TEK ZP	4
3	15393	MCH SCW,10-24*1" RND HD PHL ZP	1
4	15423	SCW,MCH 10-24*1/2"PAN HD,PH ZP	4
5	16340	DECAL, WARNING WEEDROLLER	1
6	16367	STRAIN RELIEF CONNECTOR	1
7	16380	BUSHING, 16-3 STRAIN RELIEF	1
8	16432	TRANSFORMER 115 VAC TO 24 VAC	1
9	16433	RESISTOR ASSY, WEEDROLLER	1
10	16434	RECTIFIER BRIDGE	1
11	16439	CORD ASSY, WEEDROLLER	1
12	16441	SINGLE WIRE ASSY WR POWER SPLY	3
13	16518	CAPACITOR, WR POWER SUPPLY	1
14	16519	CAPACITOR WIRE WR POWER SUPPLY	2
15	16611	MOUNT, STRAP TIE	2
16	16762	CIRCUIT BREAKER - 8 AMP	1
17	17320	STRAP, 11 IN BLACK TIE	2
18	51051	BOX WELDMENT	1
19	51068	BOX COVER	1
20	51303	ASSEMBLY, WR PS HARNESS	1
	15409	WASHER, 5/16"ID 7/8"OD NYLON FLAT (NTO SHOWN)	4

TRIPOD (OPTION)

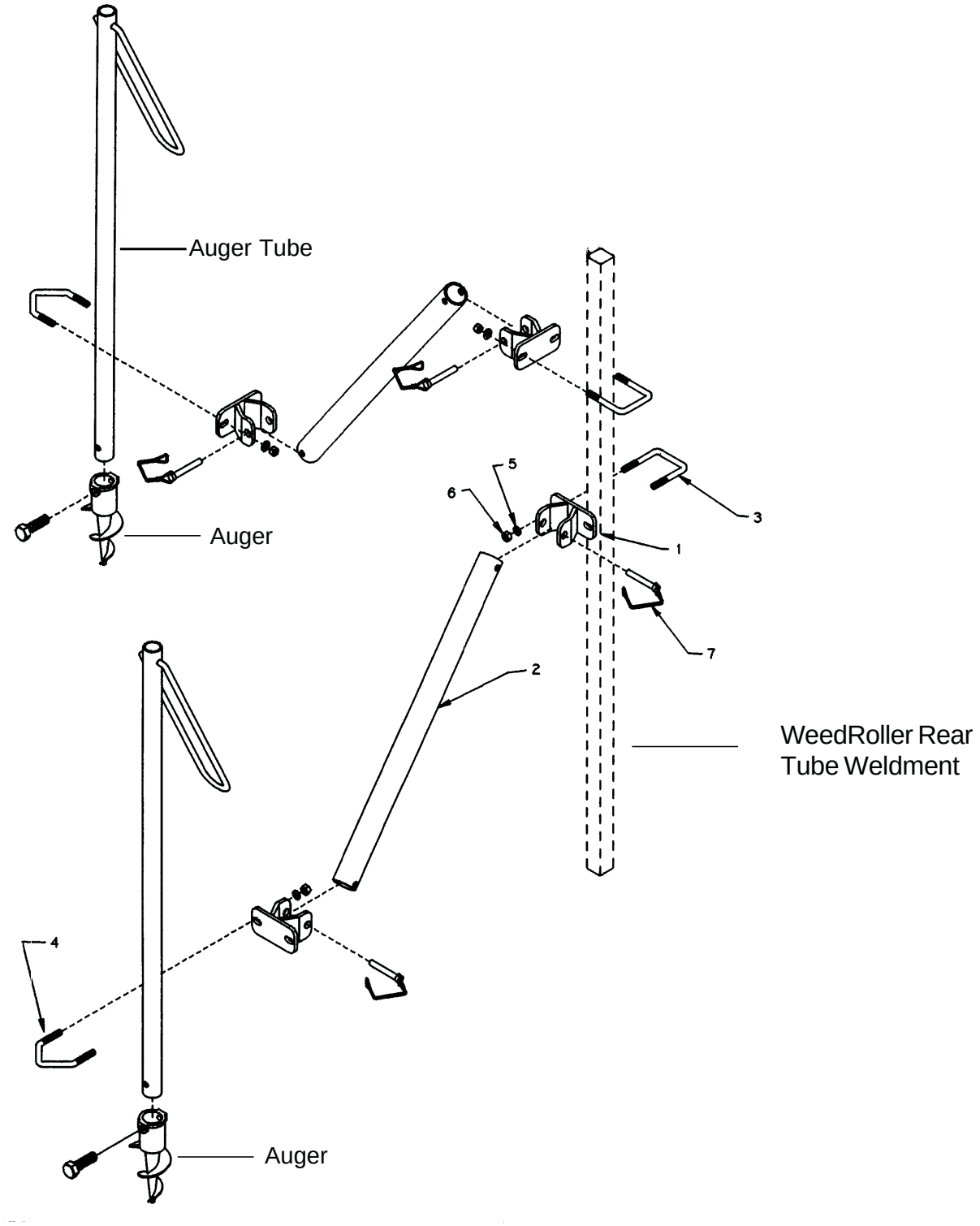

TRIPOD (OPTION)

TRIPOD INSTALLATION INSTRUCTIONS:

1. Attach augers to auger tubes with 1/2" x 2-1/2" bolts. Turn auger tubes into lake bottom until secure. For maximum stability, place the auger tubes between 3 to 5 feet apart.
2. Remove V-bolt from bracket. Place V-bolt around auger tube and reinsert ends into bracket. Secure loosely with washers and nuts. Repeat for remaining V-bolt.
3. Remove U-bolt from bracket. Place U-bolt around WeedRoller rear tube weldment. Secure loosely with washers and nuts. Repeat for remaining U-bolt.
4. Adjust brackets attached to auger tubes and rear tube weldment for maximum WeedRoller stability. Tighten nuts securely.

ASSEMBLY, TRIPOD (OPTION)			
ITEM	**PART NUMBER**	**DESCRIPTION**	**QTY.**
	51182	ASSY, WR TRIPOD (1-7)	
1	51183	CASTING, TRIPOD BRACKET	2
2	51187	WELDMENT, TRIPOD LEG	1
3	51175	U-BOLT, 2-3/8 X 3" RECT	1
4	51180	V-BOLT, DOCK MOUNT ZP	1
5	15031	WASHER, 3/8" FLAT ZP	4
6	15042	NUT, 3/8" HEX NC ZP	4
7	16808	SNAPPER PIN, 3/8 X 2-3/4"	2
	51204	ASSY, TRIPOD POST	
	51142	WELDMENT, AUGER TUBE	1
	15092	BOLT, 1/2 X 2-1/2" GR5	1
	51230	AUGER CASTING W/ HOLES	1

51311
25’ EXTENSION CORD (DC WR)

51304
70’ EXTENSION CORD (DC WR)

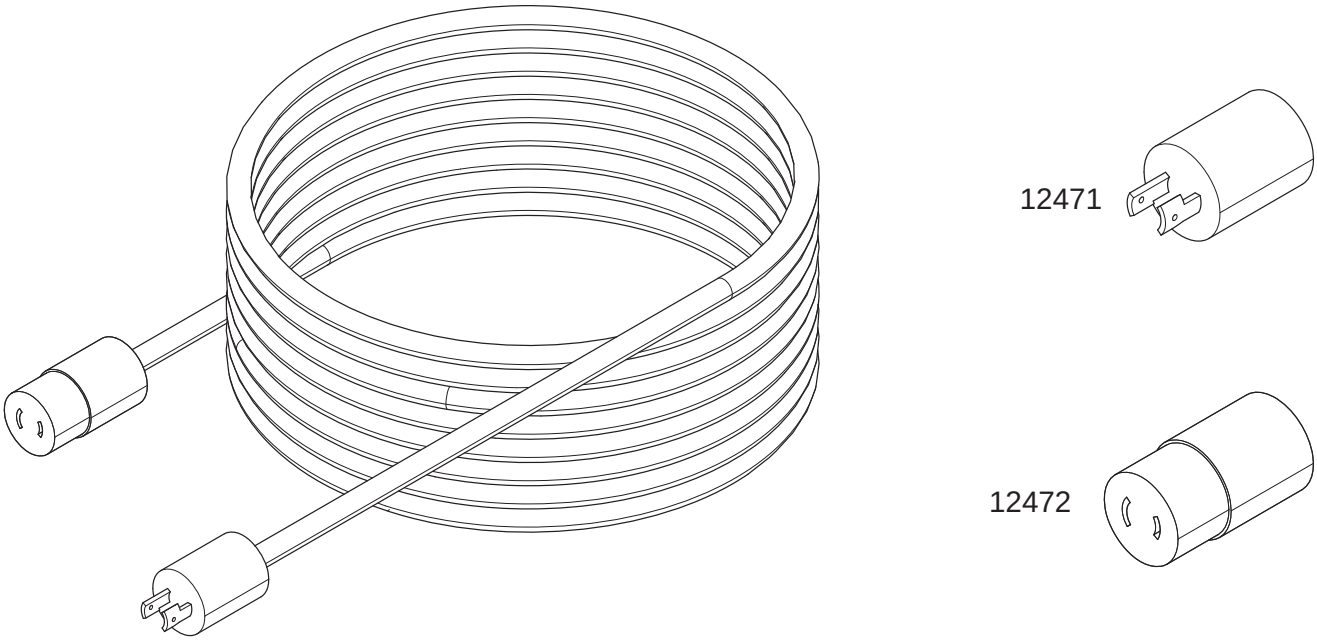

For longer docks that require more than 70 feet of cord between the 110 volt converter on land and the DC power head in the water.

DOCK MOUNTING HARDWARE KIT (OPTION)

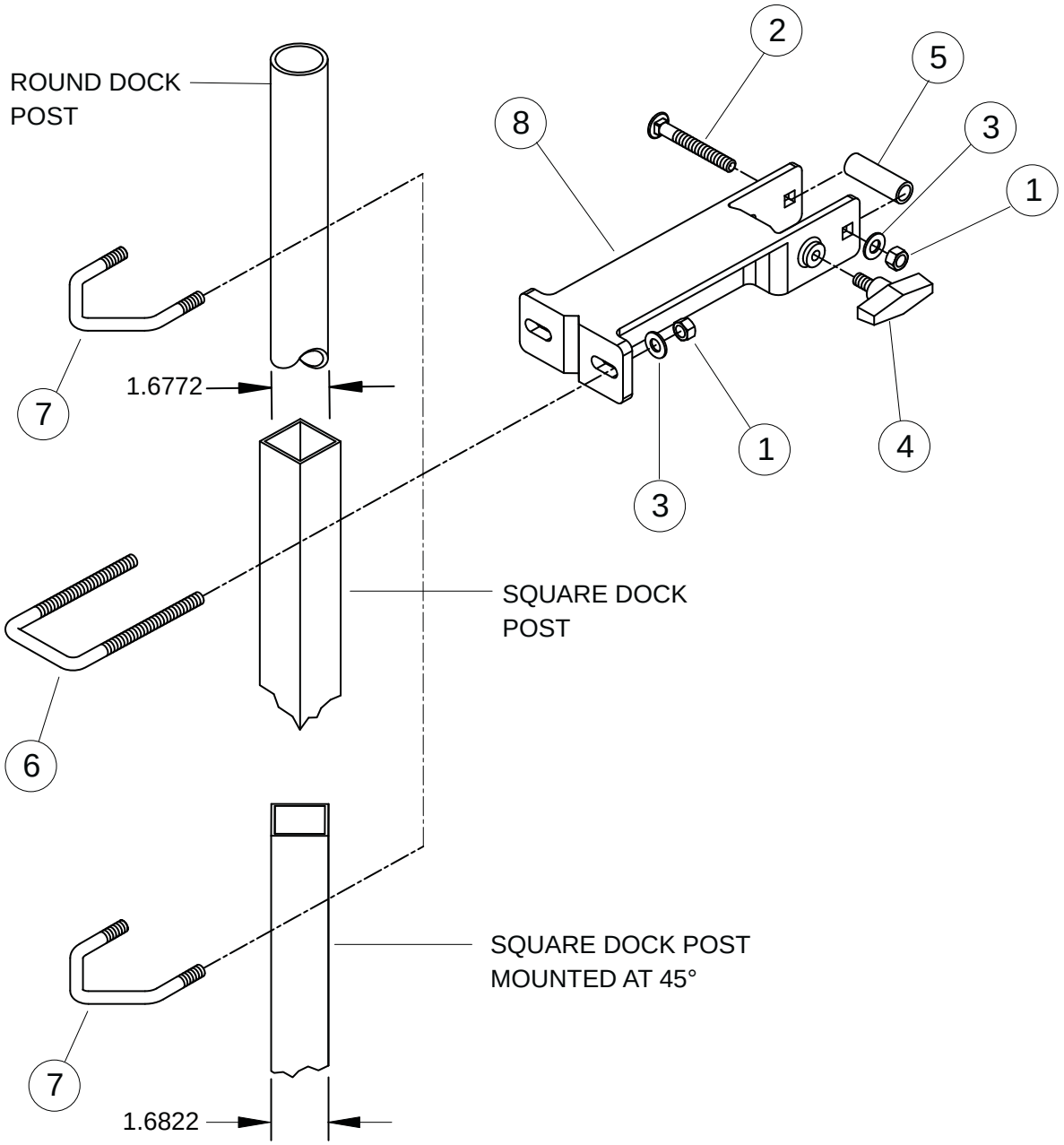

Use additional dock hardware to easily move the WeedRoller from one location to another.

51188, DOCK MOUNTING HARDWARE KIT			
ITEM	**PART NUMBER**	**DESCRIPTION**	**QTY.**
1	15042	NUT, 3/8” HEX NC ZP	6
2	15100	BOLT CARR, 3/8 X 3” GR5 NC ZP	2
3	15260	WASHER, 3/8” SAE FLAT ZP	6
4	15524	KNOB, 3/8” X 3/4” STUD	2
5	51174	SPACER, DOCK MOUNT	2
6	51175	U-BOLT, 2-3/8” X 5” RECT. ZP	2
7	51180	V-BOLT, DOCK MOUNT ZP	2
8	51191	BRACKET, DOCK MOUNT	2

MUD KIT (OPTION)

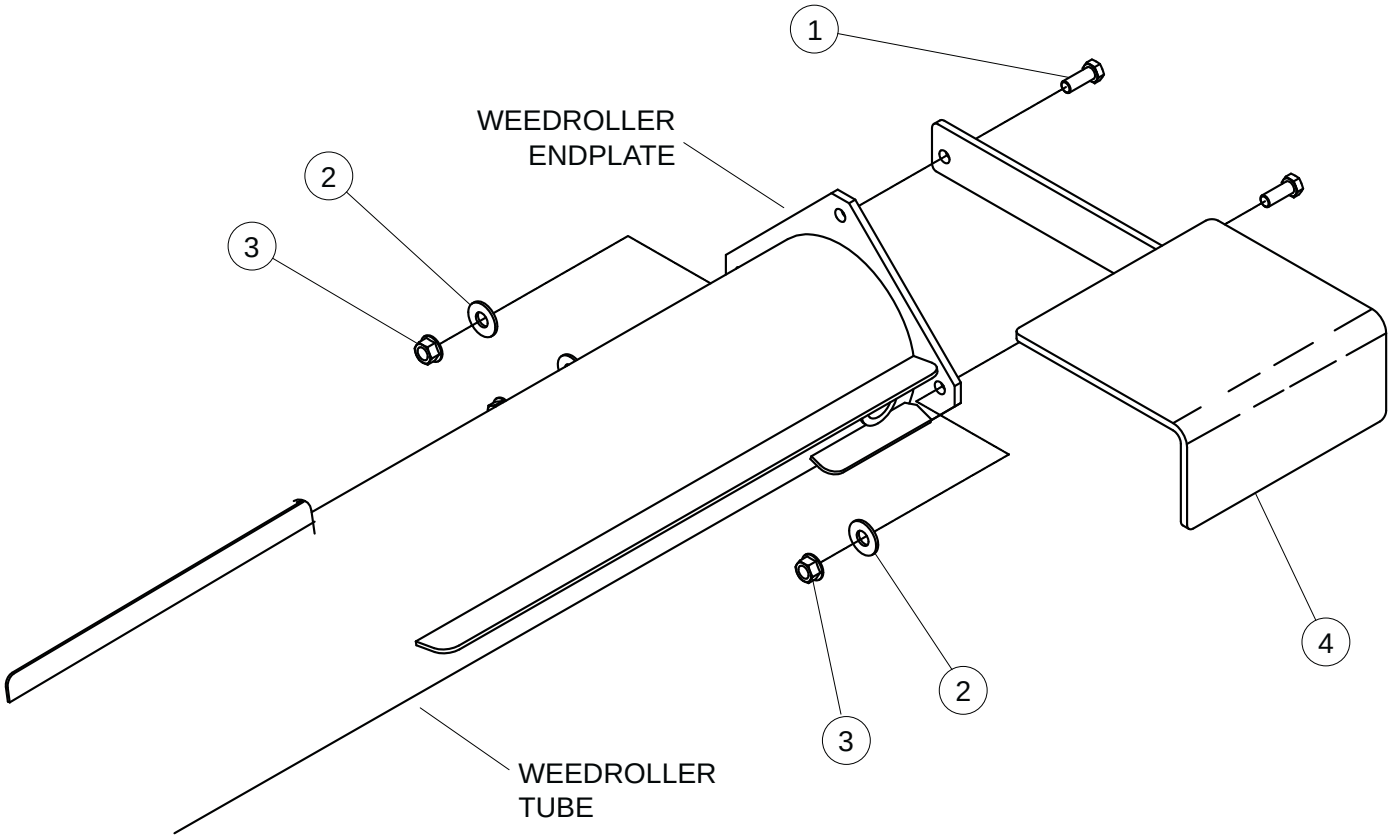

For moderate mud and muck conditions. Acts as a large paddle on the end roller, providing traction in mud. Remove mud kit after the WeedRoller has worked down to firmer lake bottom.

51320, MUD KIT			
ITEM	**PART NUMBER**	**DESCRIPTION**	**QTY.**
1	15006	BOLT, 3/8 X 1” GR5 HEX CAPSCREW	2
2	15031	WASHER, 3/8” FLAT ZP	2
3	15051	NUT, 3/8” SERRATED FLANGE NC ZP	2
4	51319	WELDMENT, MUD KIT	1

PLASTIC PIPE MUD KIT (OPTION)

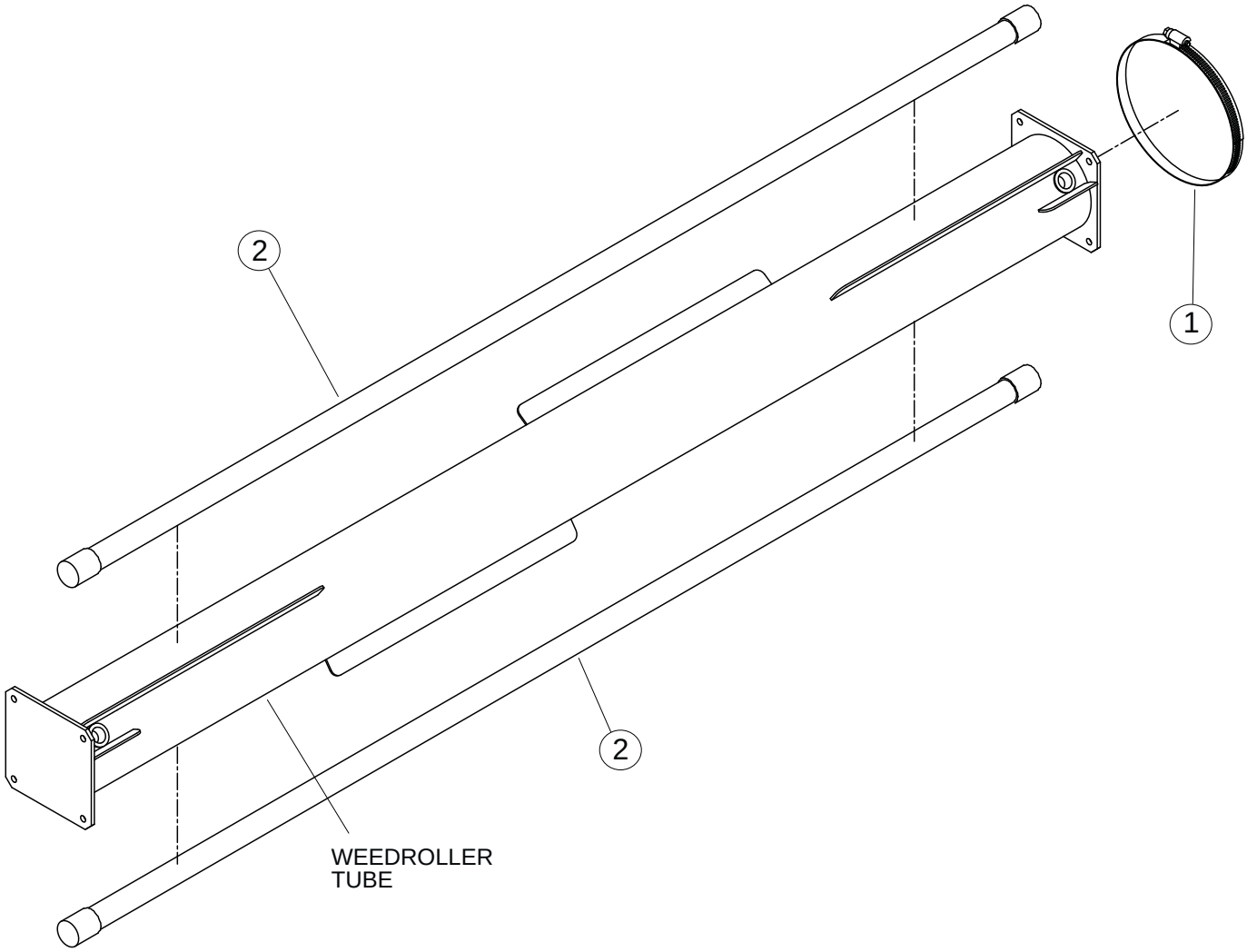

For extreme mud and muck conditions. Increases flotation of tubes. Remove mud kit after the WeedRoller has worked down to firmer lake bottom.

51134, PLASTIC PIPE MUD KIT			
ITEM	**PART NUMBER**	**DESCRIPTION**	**QTY.**
1	16626	SNAPLOCK HOSE CLAMP 7-3/4 DIA.	6
2	51147	PLASTIC PIPE ASSEMBLY	4

WEEDROLLER TALL EXTENSION KIT (DEEP WATER EXTENSION) (OPTION)

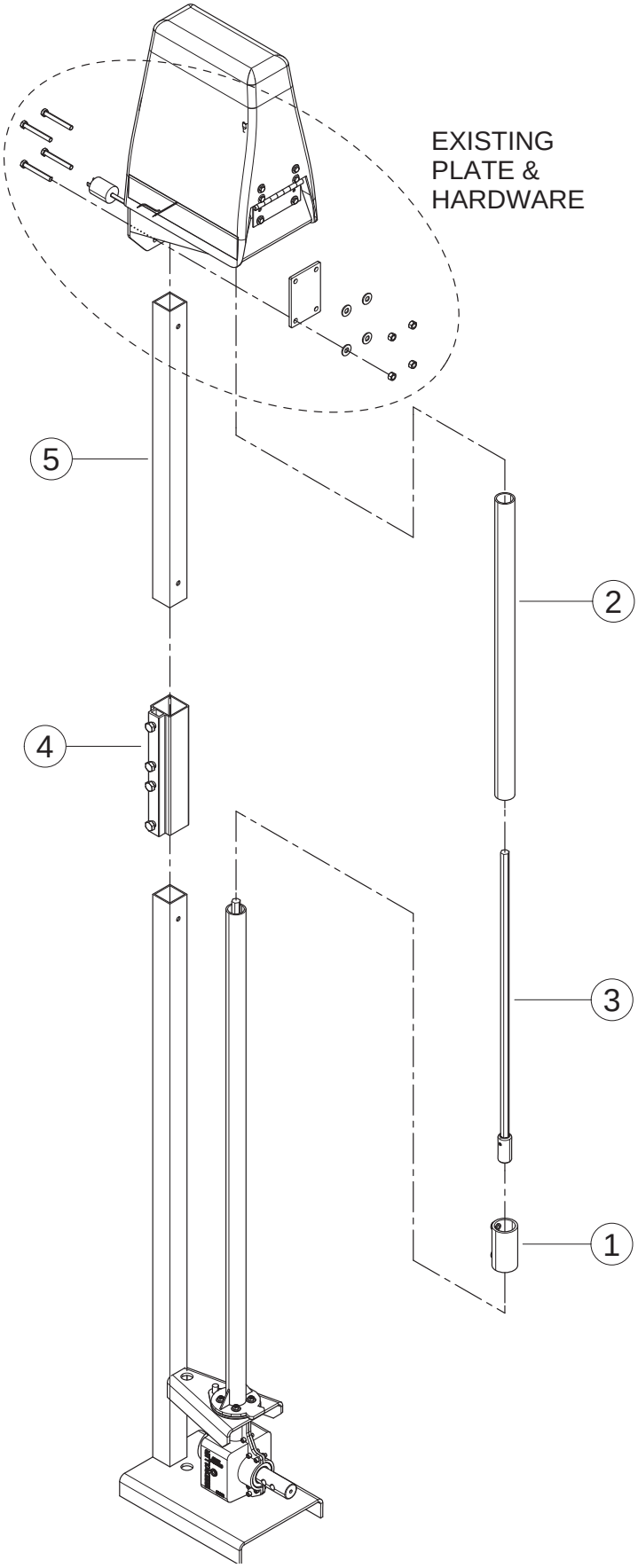

WEEDROLLER TALL EXTENSION KIT (DEEP WATER EXTENSION) (OPTION)

The 30" extension kit increases the maximum water depth of the standard unit from 4-1/2 feet to 7 feet. Up to two extensions can be added per WeedRoller.

51409, WEEDROLLER TALL EXTENSION KIT (DEEP WATER)			
ITEM	**PART NUMBER**	**DESCRIPTION**	**QTY.**
1	12613	COUPLER, PIVOT TUBE EXTENSION	1
2	51279	TUBE, WR PIVOT EXTENSION	1
3	51284	WELDMENT, 5/8 HEX SHAFT	1
4	51407-00	COUPLER, DEEP WATER	1
5	51408-00	TUBE, REAR EXTENSION	1

FLEX COUPLER REPLACEMENT (OPTION)

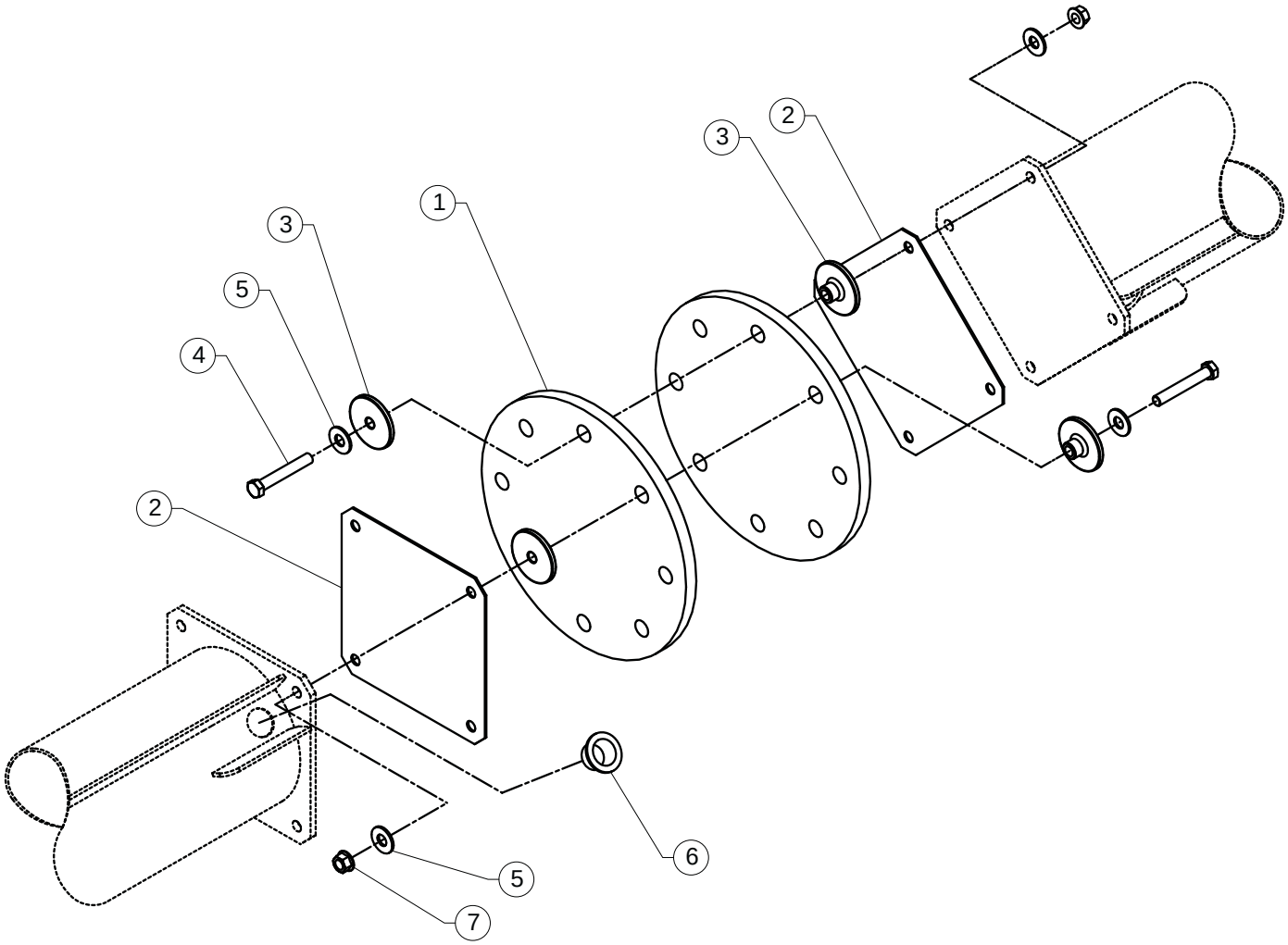

For replacing one damaged or worn coupler between roller tubes. The kit contains replacement flex coupler belting, wear plates, bushings, hardware and two tube plugs. Used only in 1995 and newer WeedRollers.

51192, FLEX COUPLER REPLACEMENT			
ITEM	**PART NUMBER**	**DESCRIPTION**	**QTY.**
1	51154	BELTING, FLEX COUPLER	2
2	51164	WEAR PLATE, FLEX COUPLER	2
3	51163	BUSHING, FLEX COUPLER	16
4	15116	BOLT, 3/8” X 2-1/2” GR5 HHCS ZP	8
5	15031	WASHER, 3/8” FLAT ZP	16
6	16580	PLUG, 1“ TUBE	2
7	15051	NUT, 3/8” SERRATED FLANGE NC ZP	8

ADDITIONAL 7 FOOT ROLLER WITH FLEX COUPLER (OPTION)

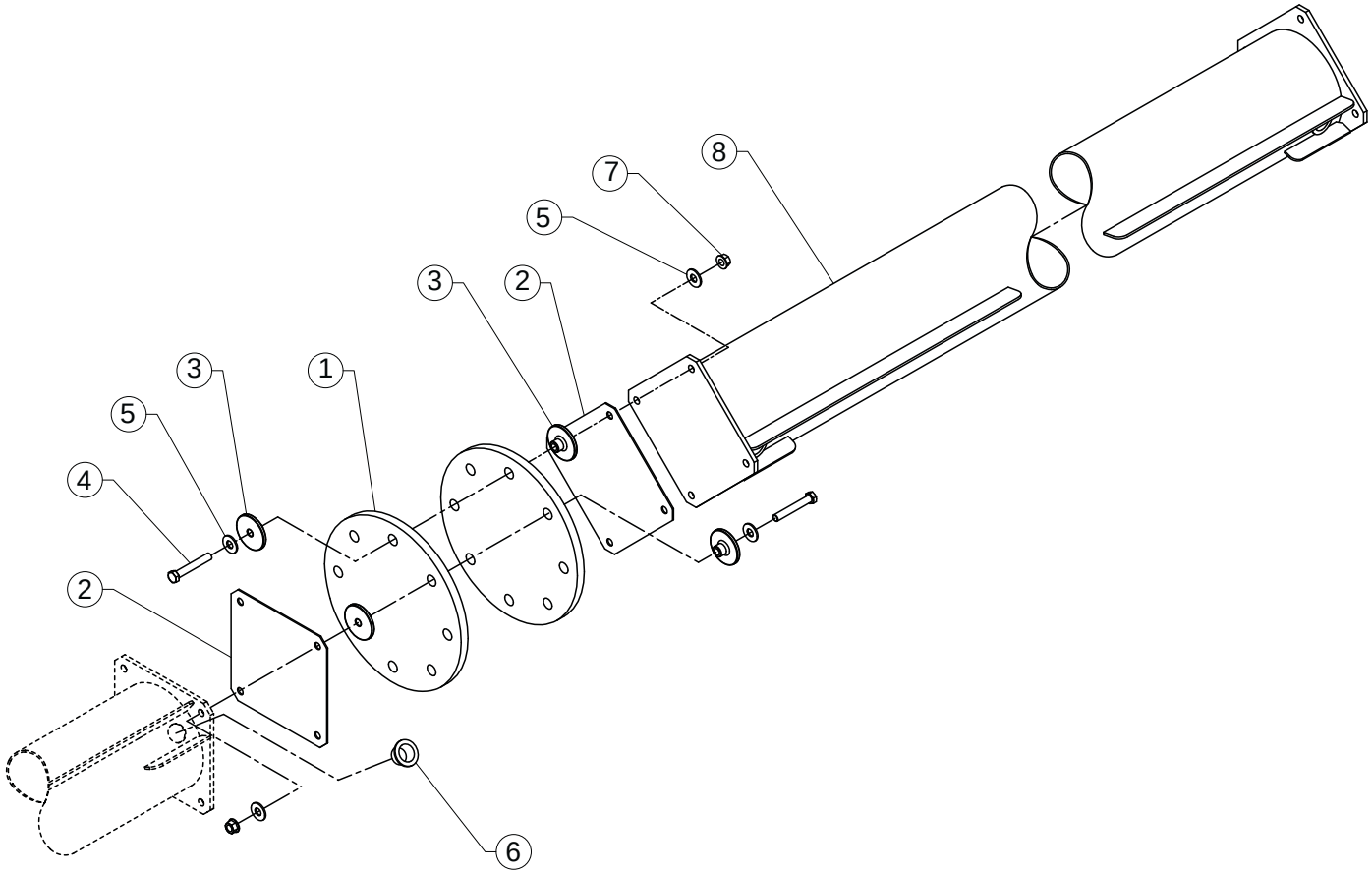

NOTE

Added tubes may require a special permit. Please consult your state and local regulations.

Comes complete with the necessary hardware to attach to the existing tubes.

51302, ADDITIONAL 7 FOOT ROLLER WITH FLEX COUPLER			
ITEM	**PART NUMBER**	**DESCRIPTION**	**QTY.**
1	51154	BELTING, FLEX COUPLER	2
2	51164	WEAR PLATE, FLEX COUPLER	2
3	51163	BUSHING, FLEX COUPLER	16
4	15116	BOLT, 3/8” X 2-1/2 GR5 HHCS ZP	8
5	15031	WASHER, 3/8” FLAT ZP	16
6	16580	PLUG, 1” TUBE	2
7	15051	NUT, 3/8” SERRATED FLANGE NC ZP	8
8	51290	WELDMENT, 7’ ROLLER	1

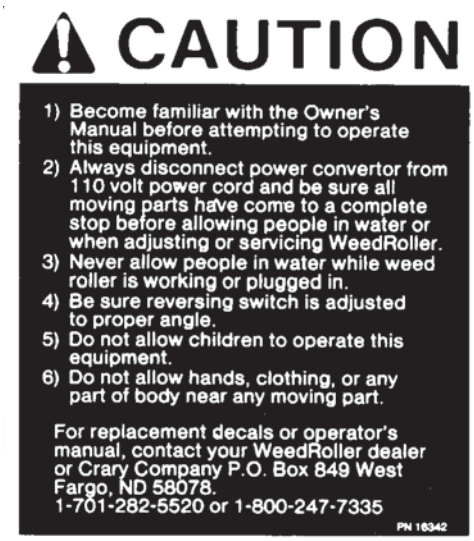

DECAL, INSTRUCTIONS WEEDROLLER
(PN: 16342)

DECAL, WARNING WEEDROLLER
(PN: 16340)

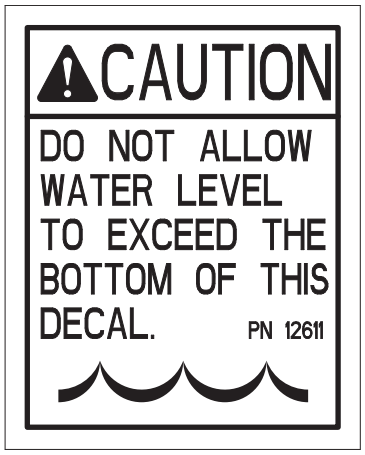

DECAL, CAUTION WATER LEVEL
(PN: 12611)

Crary Industries
237 12th St. NW ~ P.O. Box 849
West Fargo, ND 58078-0749
(701)282-5520 ~ FAX: (701)282-9522
www.crary.com
www.weedroller.com